User Guide

Flying Shear

Application Software

solutions

Option Module
For Unidrive

SCIENCE GATE
Your Automation Partner

SCIGATE AUTOMATION (S) PTE LTD
No.1 Bukit Batok Street 22 #01-01 Singapore 659592
Tel: (65) 6561 0488 **Fax: (65) 6562 0588**
Email: sales@scigate.com.sg Web: www.scigate.com.sg
Business Hours: Monday - Friday 8.30am - 6.15pm

Part Number: SSP-3100-0286
Issue Number: 1

SAFETY INFORMATION

Persons supervising and performing the electrical installation or maintenance of a Drive and/or an external Option Unit must be suitably qualified and competent in these duties. They should be given the opportunity to study and if necessary to discuss this User Guide before work is started.

The voltages present in the Drive and external Option Units are capable of inflicting a severe electric shock and may be lethal. The Stop function of the Drive does not remove dangerous voltages from the terminals of the Drive and external Option Unit. Mains supplies should be removed before any servicing work is performed.

The installation instructions should be adhered to. Any questions or doubt should be referred to the supplier of the equipment. It is the responsibility of the owner or user to ensure that the installation of the Drive and external Option Unit, and the way in which they are operated and maintained complies with the requirements of the Health and Safety at Work Act in the United Kingdom and applicable legislation and regulations and codes of practice in the UK or elsewhere.

The Drive software may incorporate an optional Auto-start facility. In order to prevent the risk of injury to personnel working on or near the motor or its driven equipment and to prevent potential damage to equipment, users and operators, all necessary precautions must be taken if operating the Drive in this mode.

The Stop and Start inputs of the Drive should not be relied upon to ensure safety of personnel. If a safety hazard could exist from unexpected starting of the Drive, an interlock should be installed to prevent the motor being inadvertently started.

GENERAL INFORMATION

The manufacturer accepts no liability for any consequences resulting from inappropriate, negligent or incorrect installation or adjustment of the optional operating parameters of the equipment or from mismatching the Drive with the motor.

The contents of this User Guide are believed to be correct at the time of printing. In the interests of a commitment to a policy of continuous development and improvement, the manufacturer reserves the right to change the specification of the product or its performance, or the contents of the User Guide, without notice.

Copyright	© June 2001 Control Techniques SSPD
Author	Gareth Jones
Issue Code	Issue 1
System File	>= V03.02.xx
Application File	V01.00.00
CTIU File	V01.00.00

Contents

1 Introduction

1.1 Who Should Read This Manual?

This manual is intended to assist the engineer in commissioning the application software, and should be read in conjunction with the documentation that is supplied with the drive and other associated hardware. The safety systems that are required to prevent risk of injury to persons operating or maintaining the machine are not discussed in this manual. The engineer must be familiar with and able to implement the required safety systems. This manual assumes that the engineer is familiar with relevant Control Techniques products and understands the requirements for the application.

If you do not feel confident of the above, then you should contact your local Control Techniques drive centre or distributor to obtain service / advice.

1.2 Application Overview

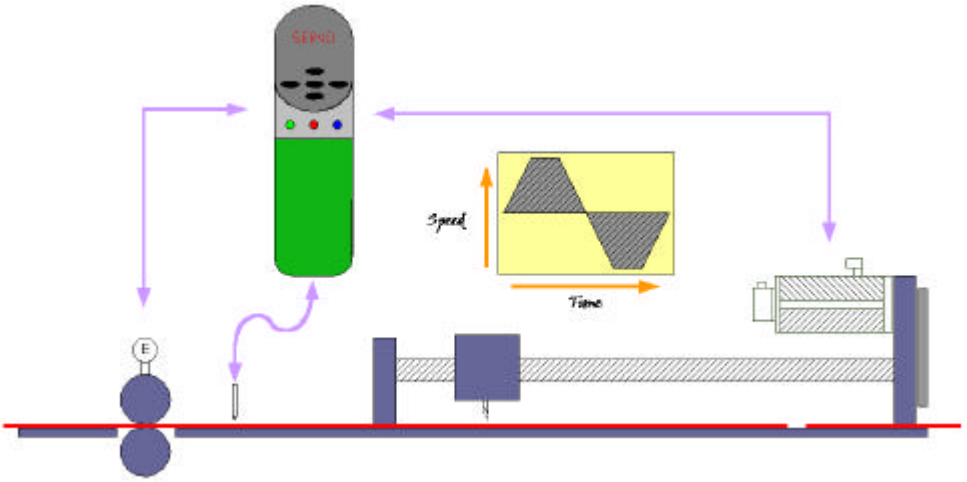

The Flying Shear is a common industrial application for cutting a product into smaller lengths, without stopping the line, this means that the main production process is not interrupted, and so machine productivity is maximised.

The cutting tool is typically mounted on a carriage that moves either parallel to the product flow or at an angle across the product flow. The flying shear drive accelerates the carriage to synchronise with the line speed, while synchronised the cut is done and the carriage then decelerates and returns to its original position ready to cut again. There are also many other similar applications where a carriage must be synchronised at line speed and most of these can also be accommodated using the flying shear application software.

The drive is configured using real engineering units of choice such as mm or inches. This means that the configuration of the system is made very easy, through an operator interface or by entering configuration parameters directly on the drive.

The forward profile is optimised for each application by breaking the synchronised, part of the profile down into three areas: settling time, cut time and tool rise time, these are entered in milliseconds. The drive will then calculate the profile and perform checks to ensure that the parameters entered are achievable, given the length of motion available, and also the required cut length.

Typical applications include various types of cut to length machines, depositors, punches, product inspection, or any other process where synchronisation at line speed is required.

A couple of possible applications are:

A machine extrudes plastic pipes that must be supplied to the customer in pre-cut lengths. The extrusion process requires the extruder to run at a continuous speed to maintain the quality of the product. The pipe is uniform along its length and provided the length is within a set tolerance then the pipe is fit for sale. The flying shear is used to cut the product cyclically.

The end product is a steel carton. In the first part of the process the steel is printed and must then be punched using a registration mark printed on the product. The flying shear is used to detect a mark and accurately synchronise the shear with reference to the mark.

1.3 Features

- Hardware and software limits.
- Fieldbus interfaces are available: CT-Net, Profibus, Devicenet, Interbus-S, Modbus plus, Can-Open and RS485.
- Manual functions are available such as Jogging.
- High-speed output can be used to fire the cutting tool.
- Registration can be used to initiate the cut.
- Batch counter.
- The motion profile may be changed during operation such as cut lengths, acceleration etc.
- Real engineering units are used.
- Units are defined for the master and slave axis, as the number of encoder counts per unit. The units are entered as a numerator and denominator to allow high-resolution fractional values.

- Resolution of the cut-length may be entered to within 0.001 units.
- Profile optimisation reduces the machines mechanical stress: The return profile is calculated to operate at the slowest speed and acceleration rate, and yet with sufficient time to achieve the next cut, either triangular or trapezoidal profiles are used.
- MMI support.

2 Mechanical Installation

NOTE

Ensure the Unidrive is correctly installed in accordance to the Unidrive Installation Manual

2.1 Application Module & Unidrive

- Isolate the Drive from the main supply and allow 5 minutes for the DC Bus capacitors to discharge.
- Insert the Flying Shear Application Module as shown below. Ensure that it is correctly inserted. The module will click firmly into place.
- The Unidrive must be disconnected from the mains supply before installing or removing an option module.

2.1.1 Application Module

- To remove the module, pull on the black tab, and the module will disengage from the connector and pull out of the Drive.

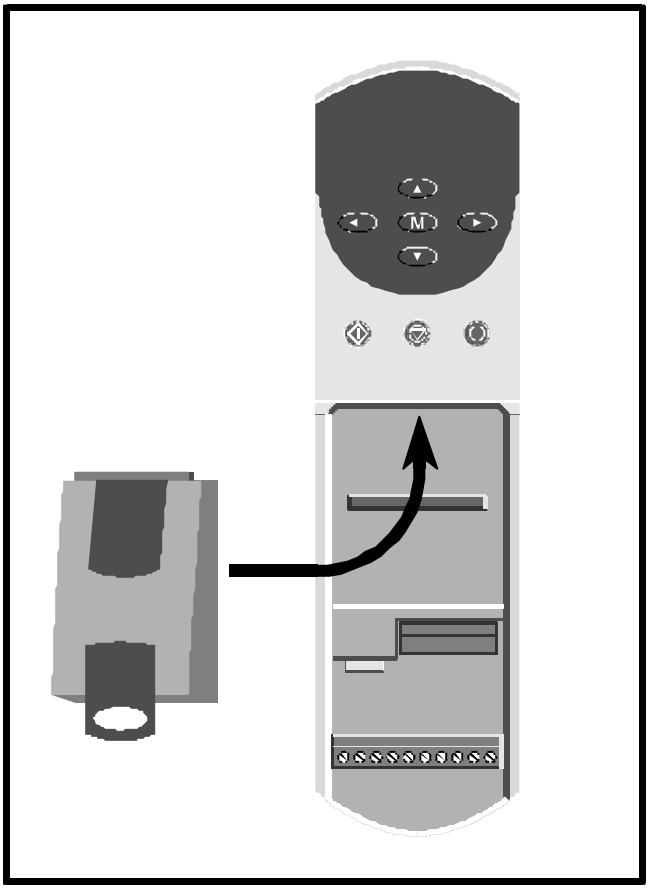

2.1.2 Second encoder / resolver / SinCos Module

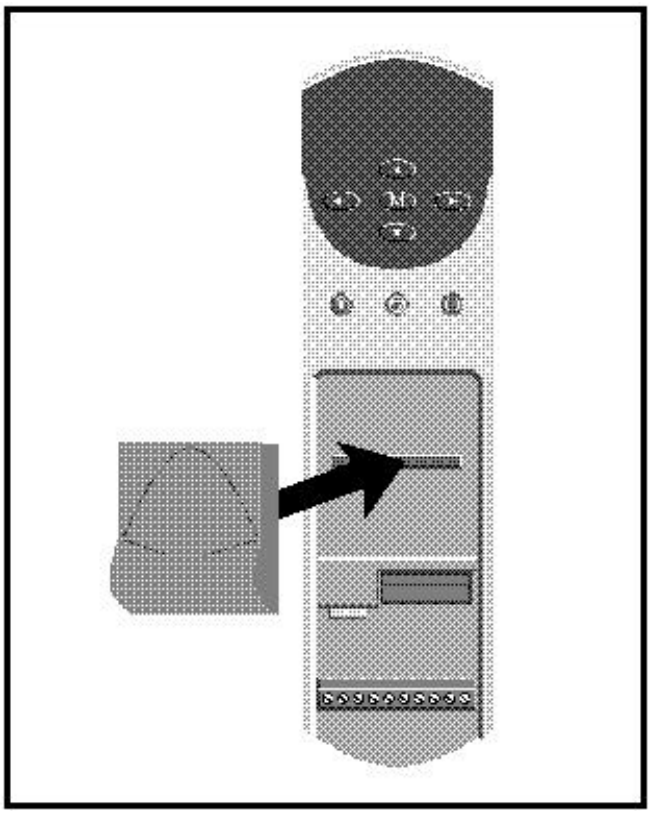

3 Electrical Installation

3.1 Unidrive

3.1.1 Control

+24V digital supply (Terminal 22)

Supply for external digital signal devices.

Voltage Tolerance:	±10%
Nominal output current:	200mA
Overload output current:	240mA
Protection:	Current fold-back above 240mA

+10V analogue supply (Terminal 4)

Supply for external analogue signal devices

Voltage Tolerance:	±1%
Nominal output current:	10mA
Protection:	Current limit and thermal trip

Digital Outputs

Type of output:	Negative logic digital (push-pull)
Voltage range:	0V to +24V
Max. output current:	100mA
Overload output current:	120mA
Update Time: (info...)	5.5ms / 7.4ms

Digital Inputs

Type of input:	*Negative logic digital
Voltage range:	0V to +24V
Absolute max. Voltage range:	-3V to +30V
Input current when +24V applied:	3.2mA
Logic levels:	Logic high: >+15V Logic low: < +5V
Sample Time: (info...)	5.5ms / 7.4ms

*Drives with firmware V2.10.4 and later allow the selection of either negative logic or positive logic on the inputs. Selection is made with parameter 08.27.

Analogue Outputs

Type of output:	Single-ended analogue - bipolar
Max. output voltage:	-10V to +10V
Max. output current:	10mA peak
Load resistance:	1kW minimum
Protection:	Short-circuit proof
Resolution:	10-bit plus sign
Update period: (info...)	5.5ms / 7.4ms

3.2 Power / Motor Connections

Please refer to the Unidrive documentation for the relevant information regarding:

- Voltage Rating
- Current rating
- Motor Connections
- Encoder / Resolver Connections

3.3 Connector Location

3.3.1 Unidrive Control Terminal Connections

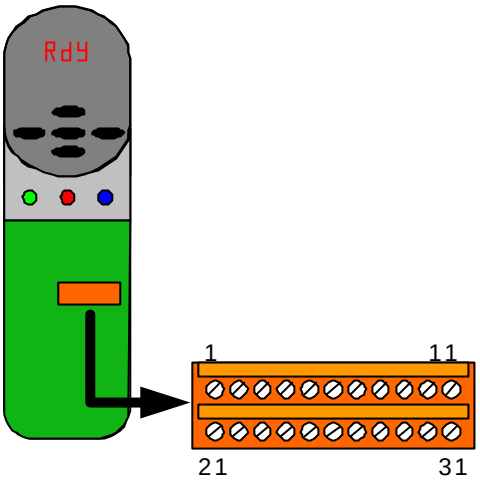

3.3.2 UD70 Connections

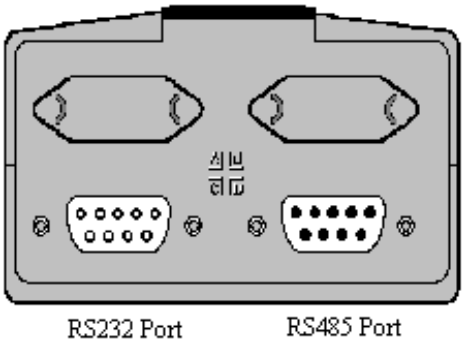

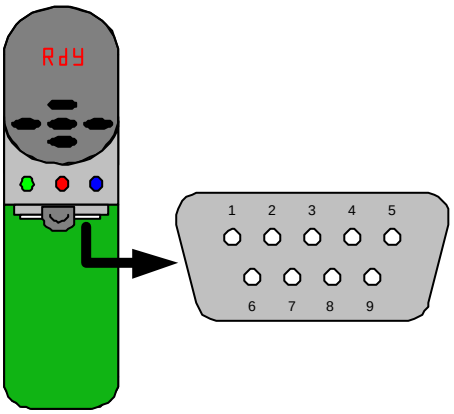

Pin	Function
1	0V serial comms
2	/TXD
3	/RXD
4	Digital Input 0
5	Digital Input 1
6	TXD
7	RXD
8	Digital Output
9	0V Digital

3.3.3 Small Option Module

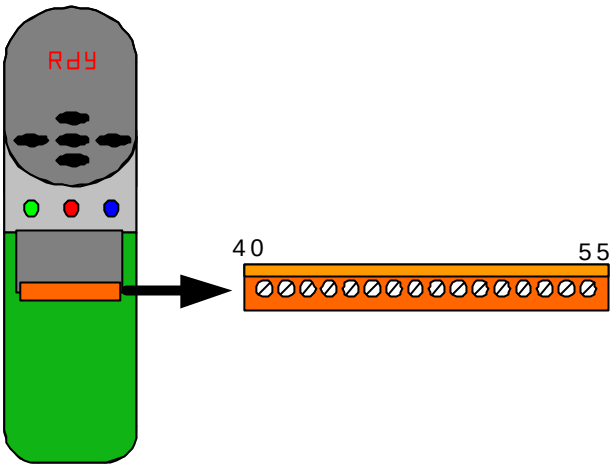

3.3.4 Interface module

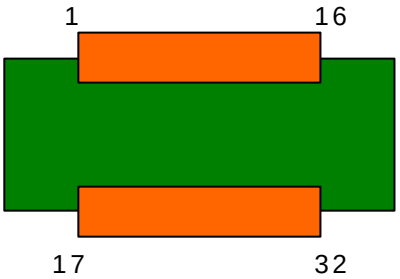

3.4 Default Control Connections

3.4.1 Control Connections

Unidrive Control Terminal

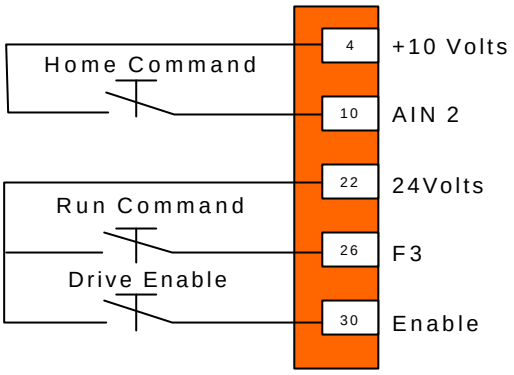

3.4.2 Limit Switch Inputs

Unidrive Control Terminal

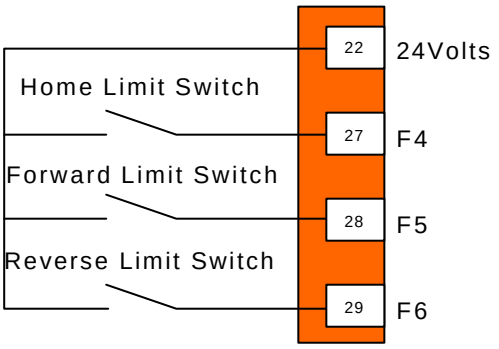

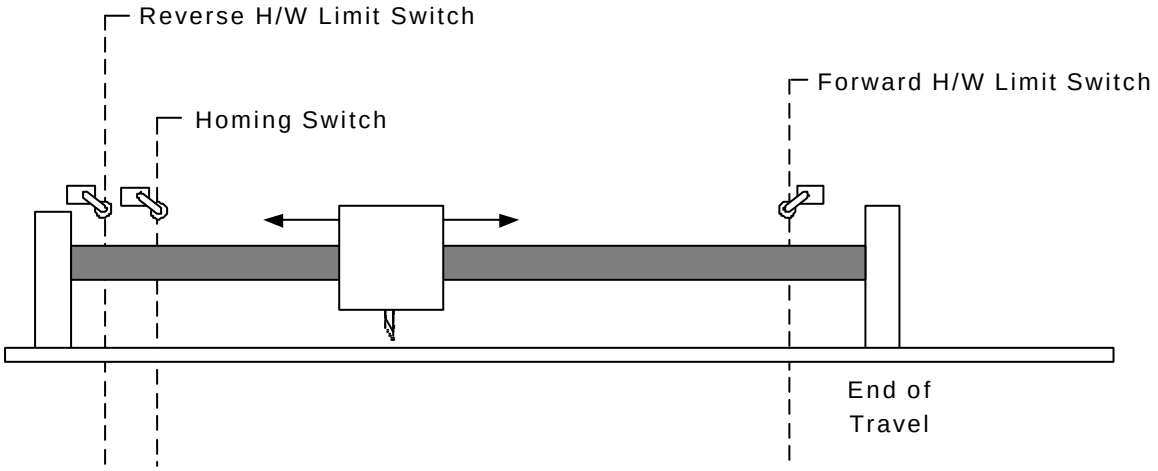

Note: If a failure to stop would cause risk of injury to persons then a hardware safety system should be used to ensure that the flying shear carriage would stop if the limits are passed.

3.4.3 Hardwired Interface Connections

Unidrive control Terminal

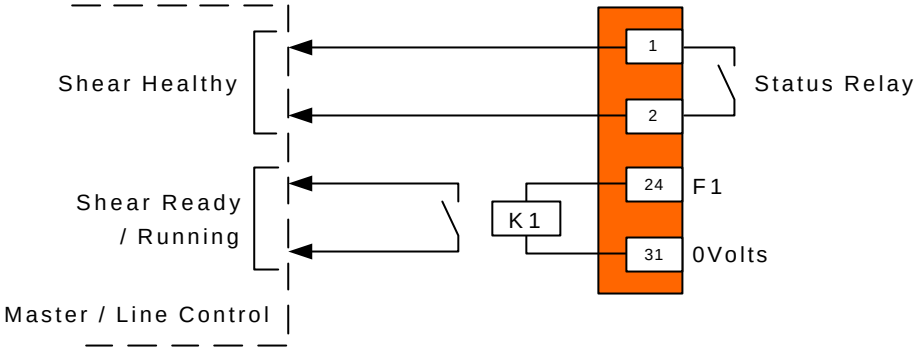

3.4.4 Registration Sensor Connections

Note: Second Encoder Module - UD51 Only.

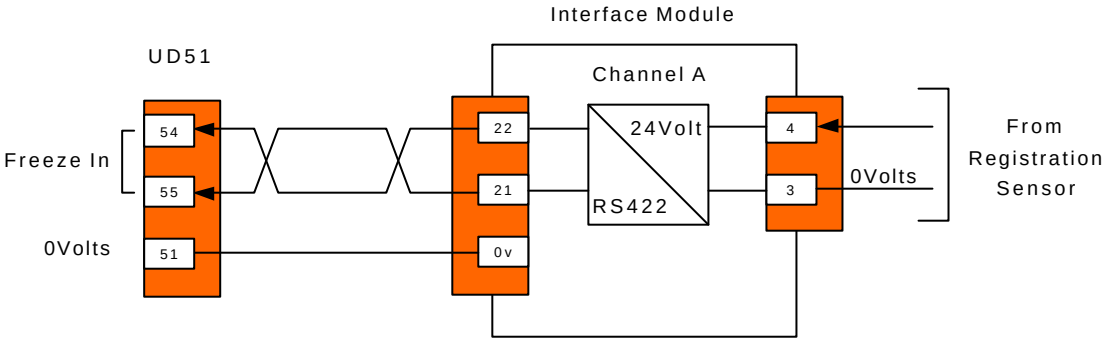

For Sin Cos Encoders the Freeze input is connected to pins 48, 49 and 52 which are Freeze, /Freeze and 0volts respectively.

3.4.5 Tool Control Connections

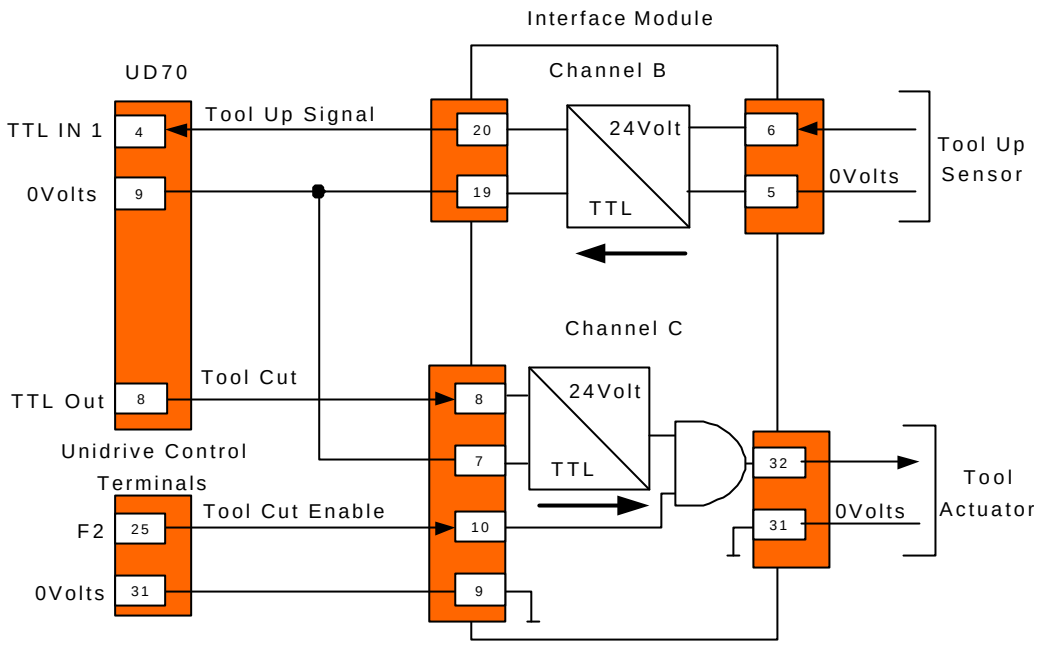
Interface Module
UD70
Channel B
TTL IN 1
4
Tool Up Signal
20
24Volt
6
Tool Up
Sensor
0Volts
9
19
TTL
5
0Volts
Channel C
Tool Cut
TTL Out
8
8
24Volt
Unidrive Control
Terminals
7
TTL
32
Tool
Actuator
Tool Cut Enable
F2
25
10
31
0Volts
0Volts
31
9

3.4.6 Connecting to a remote device using RS485 Comms

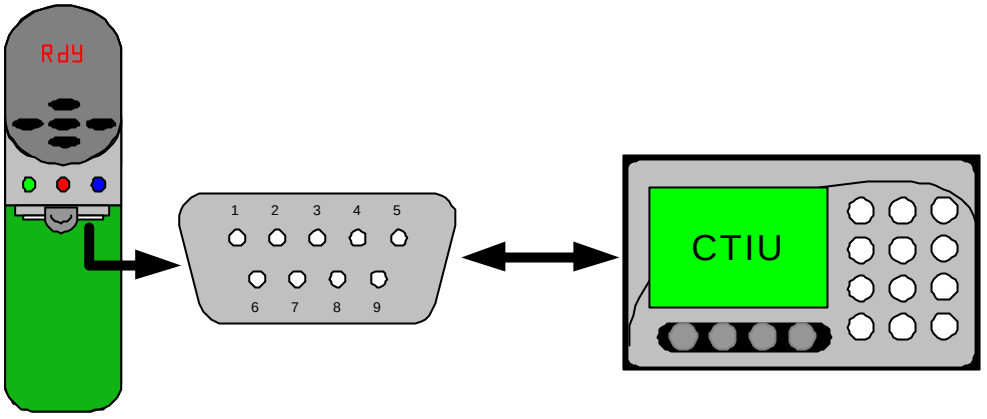

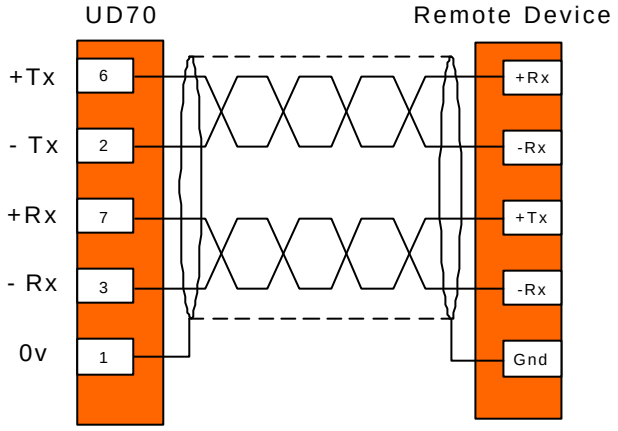

3.4.7 Monitoring

Unidrive Control Terminals

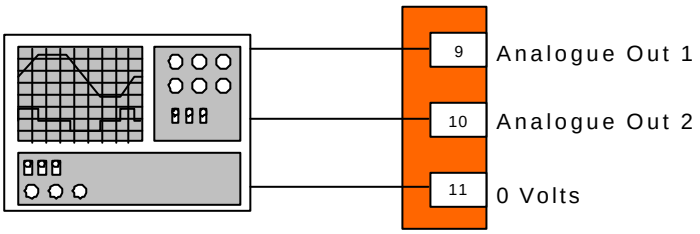

3.5 I/O Mappings

Setting parameter 18.44 to a 1 sets the default I/O mapping, the parameter will immediately return to 0. Setting the normal Unidrive I/O mapping parameters to alternative locations can change the default configuration. As default the drive is set to positive logic, parameter 8.27 = 1.

Digital I/O

I/O Point	Description	Destination	Invert	In / Out Select
F1	Shear Ready	19.48	Off	Out
F2	Tool Enable	19.04	Off	Out
F3	Run Input	19.33	Off	In
F4	Home Switch	18.32	Off	In
F5	Fwd Limit	19.40	Off	In
F6	Rev Limit	19.41	Off	In

Analogue I/O

Ain 0 / 2 are not used

Ain 1 is used to initiate a home sequence using programmable thresholds.

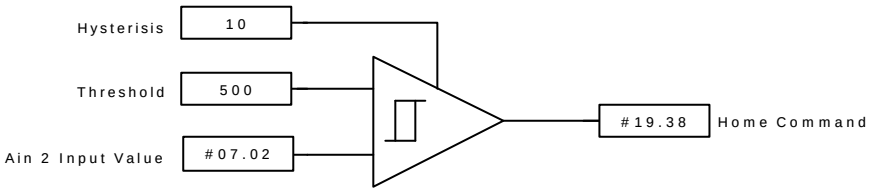

Programmable Threshold Settings

12.03 = 7.02

12.04 = 500

12.05 = 10

12.07 = 19.38

Analogue outputs are not mapped; these should be used as required for monitoring

UD70 TTL I/O

The UD70 IO is used because the update is very fast (virtually immediate), and it removes the need for additional external I/O, if you believe that your application does not require the fast update then you could decide to use the normal Unidrive I/O.

TTL In 0 – Tool Clear / Up. Alternatively write to parameter 20.40.

TTL in 1 – Not Used

TTL Out – Tool Cut Signal, same as parameter 18.44.

4 Software Installation

There are two software files that are required to be installed within the Application module, these are as follows: -

1. Application file - Fly.bin
2. System file - This is dependant on the application and fieldbus interface used.

UD70OS.SYS - UD70 Application module only
UD70NET.SYS - UD70 and CTNet
IBSPROFI.SYS - UD70 and Profibus-DP or Interbus
DNET.SYS - UD70 and Devicenet
MBPLUS.SYS - UD70 and Modbus-Plus
DPLCAN.SYS - UD70 and CAN
CANOPEN.SYS - UD70 and CANopen

The following parameters indicate the installed software version. '0' denotes no software file is installed.

Parameter	Description	Parameter Notation
17.02	System file version number	2.81 = V02.08.01
20.49	Application file version number	20801 = V02.08.01

To download the system and/or the application file to the application module the following items are required: -

- A standard one to one serial cable connected between the PC serial port and the RS232 port on the application module, (Connector C).
- Control Techniques Windows™ 'WinFlasher' software. This software is available from any Control Techniques drive centre, or comes complete with 'Sypt' programming tool.

5 Getting Started

5.1 Unidrive

1. Default all drive parameters.
2. Refer to the Unidrive Getting Started Manual to commission the Unidrive before attempting to set up the Flying Shear Application.
3. If the UD70 is not new then check that the menu 20 parameters are zero.
4. Set parameter 17.13 = 1, so that the application programmes will run automatically on power-up.

Note: Drive Switching Frequency is set at 9Khz.
Speed Loop Update = 1.84ms

5.2 Operating Modes

5.2.1 Parallel Flying Shear

With parallel flying shears the carriage travels in the same direction as the product, in the example shown below a saw is used to cut through a product while the shear is synchronised. The saw would then be raised and would return to the start position ready to repeat the Cycle. However, the parallel mode is best suited to applications where the tool operates instantaneously across the whole product at the same time, such as a punch tool or a shear, saw applications here are best achieved using the angled mode.

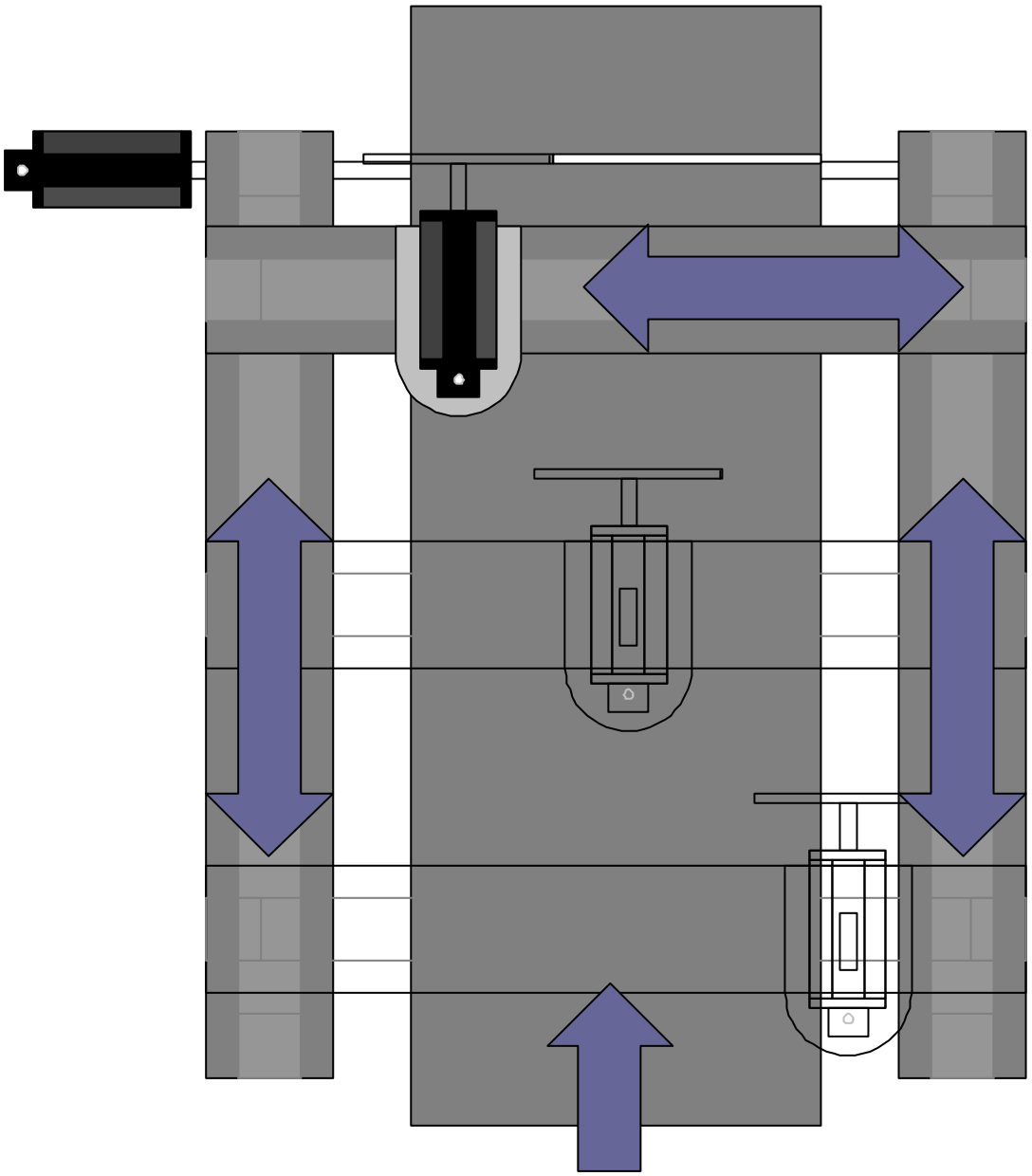

5.2.2 Angled Flying Shear

With Angled Flying shears the saw travels across the product at an angle to the product flow, the speed that the saw carriage must travel depends upon the angle between the shear and the product flow. This mode is especially useful in applications such as a saw or a plasma-cutting tool where the tool must travel across the product at 90 degrees to the flow.

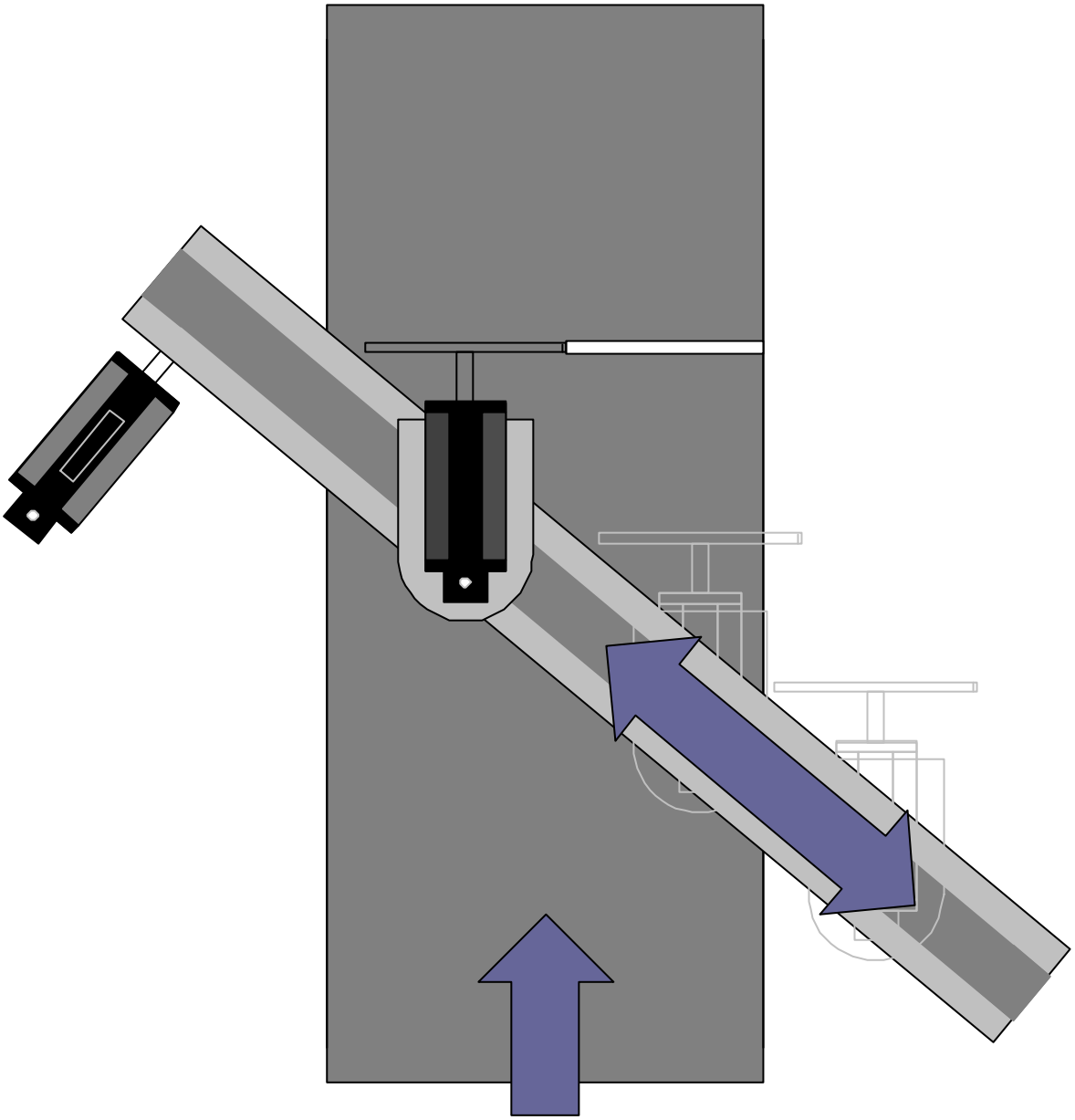

5.3 Scaling

A unit for scaling must be selected, such as mm or inches, any unit that represents distance may be used provided the master encoder and the slave encoder use the same. The scaling is entered as encoder edges per unit as an integer numerator and denominator.

Distance is entered as	units
Speed is entered as	units / s
Acceleration is entered as	units / s^2

5.3.1 Selecting suitable units

The units selected affect the resolution and the maximum values of the parameters that are entered, for example, if you were to use microns as your units, then the biggest cut length you would be able to set would be 32mm and the resolution would be 0.001 microns. Alternatively, if you used metres as your units then the cut length could be up to 32000 metres, but the resolution would be very poor.

Here are some examples of the parameters:

Parameter Description	Resolution (Units)	Maximum Value (Units)
Cut Length	0.001	32000
Length of the shear travel	1	32000
Following error limit	0.001	32
Registration Position	0.001	32000
Fwd & Rev Software Limits	0	+/- 32000

5.3.2 Example Scaling Calculations

For this example we will select mm as our unit.

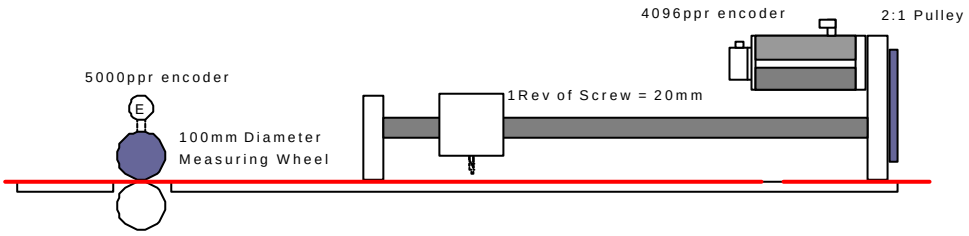

Master

The quadrature encoder will give the following resolution
4 * 5000 = 20000 counts / rev

Circumference of the measuring wheel is
PI * 100mm = 314.16 mm

The encoder counts per mm = 20000 / 314.16 = 63.66

The numerator and denominator could be entered as:

Numerator = 6366

Denominator = 100

Slave

The encoder resolution is 4 * 4096 = 16384 counts per mm

If the motor travels 1 rev then the screw will travel 0.5 revs and the carriage will travel 10 mm.

Encoder counts per mm = 16384 / 10 = 1638.4

The numerator and denominator could be entered as:

Numerator = 16384

Denominator = 10

If the value of the numerator is too large then the units must be changed, such as mm * 10 could be used.

Note: In this example the ratio between the master and the slave resolution is approximately a factor of 26 (1638.4 / 63.66), this means that during the time that the slave is synchronised to the master, when the master moves 1 count then the slave must move 26 counts, this is like an amplifier with a very high gain, and can produce some problems with noisy operation and instability. To prevent these problems, it is recommended to increase the resolution of the master so that it is similar to the resolution of the slave, this could be done by selecting a smaller measuring wheel diameter and / or increasing the encoder resolution.

5.4 Resolution And Accuracy

Calculating the accuracy that is achievable from the flying shear depends upon many factors, and so is very difficult to calculate reliably, however, from experience we can make some assumptions and estimate the likely accuracy that we can realise.

If we assume that the mechanical system is well designed:

- The inertia mismatch between the load and motor is approximately 1:1.
- The couplings / gearing used are rigid and low backlash and not flexible rubber type couplings.
- The motor / drive combination is capable of producing sufficient torque to accelerate the load at the required rate.

We can say that typically on a system with a 4096-ppr encoder we can achieve a steady state following error of between +/-10 – +/-50 counts per Metre travelled.

In the example in section 4.2.2 we can calculate 50 counts of the slave axis equates to 0.03mm/Metre, therefore the likely achievable accuracy of the positioning system is worst-case +/-0.03mm/Metre. Other errors from mechanical tolerances will add to reduce the achievable accuracy of the machine.

If the resolution is increased, such as by fitting SinCos encoders then the accuracy can be improved, however it is not a linear relationship, if we double the encoder resolution then we should not expect half the error.

If the ratio between master and slave is large then slight movements on the master axis cause large changes in required position in the slave so the net effect is a greater following error than if the gear ratio was nearer 1:1.

Also, if the mechanical system is suspect then a degradation of the accuracy will be seen.

5.5 Commissioning Sequence

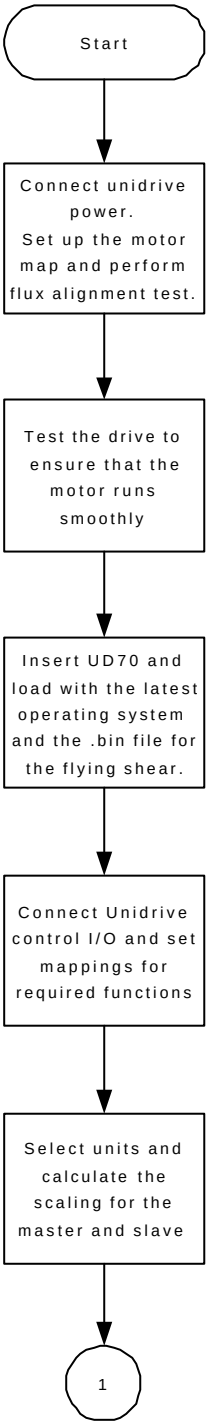

Commissioning Notes

Leave the UD70 disconnected from drive. The Unidrive Manual will assist in connecting the unidrive and setting up the motor map. Motor must be uncoupled from the machine for practical and safety reasons.

Run the unidrive in keypad mode to check satisfactory drive / motor operation. To use keypad mode set 1.14 = 4 and apply the enable signal to the drive (connect pin 30 and 31).

If UD70 is not supplied preloaded with software then use the software provided on disk to load the software onto the UD70 and CTIU operator interface if used.

Default IO mappings may be used, however these will not be satisfactory for every application, in which case configure the IO mappings as required to perform the functions that you require.

Refer to Section x.xx for guidance on selection of suitable units

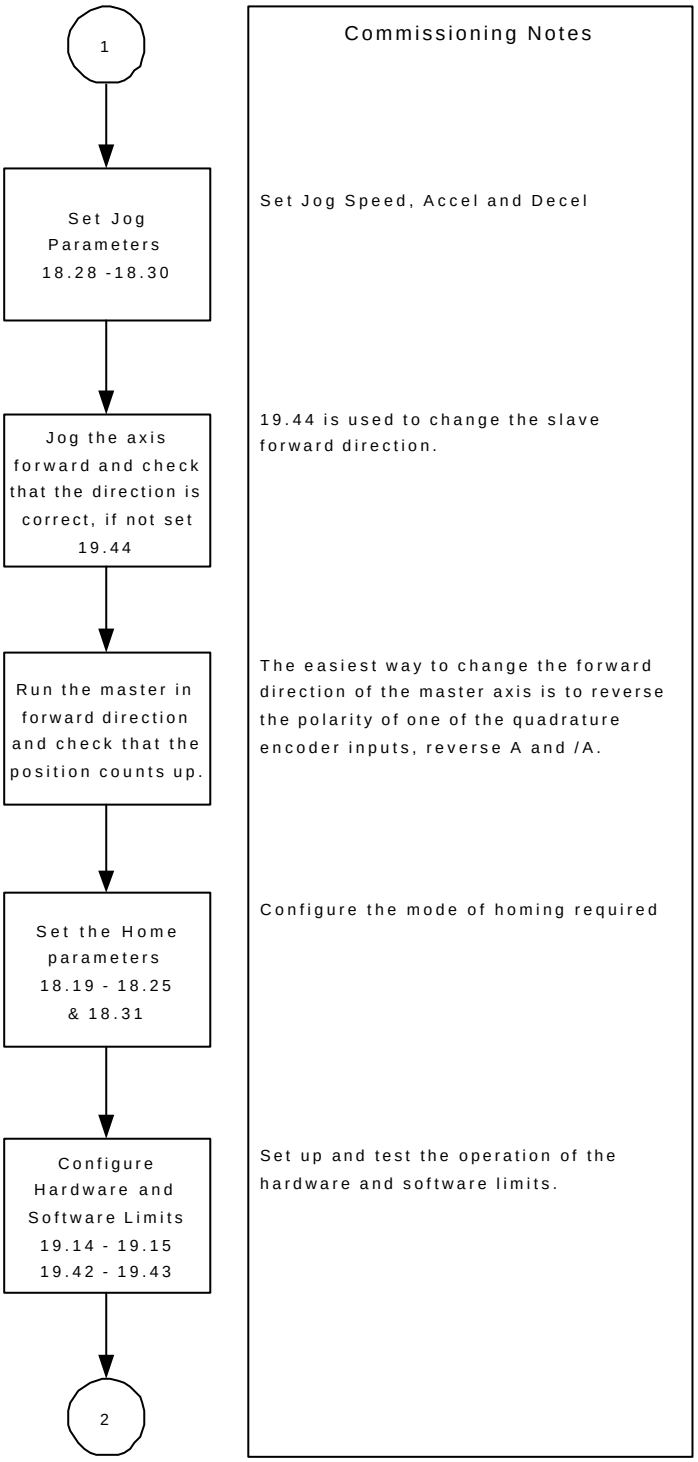
1
Set Jog Parameters 18.28 -18.30
Jog the axis forward and check that the direction is correct, if not set 19.44
Run the master in forward direction and check that the position counts up.
Set the Home parameters 18.19 - 18.25 & 18.31
Configure Hardware and Software Limits 19.14 - 19.15 19.42 - 19.43
2
Commissioning Notes
Set Jog Speed, Accel and Decel
19.44 is used to change the slave forward direction.
The easiest way to change the forward direction of the master axis is to reverse the polarity of one of the quadrature encoder inputs, reverse A and /A.
Configure the mode of homing required
Set up and test the operation of the hardware and software limits.

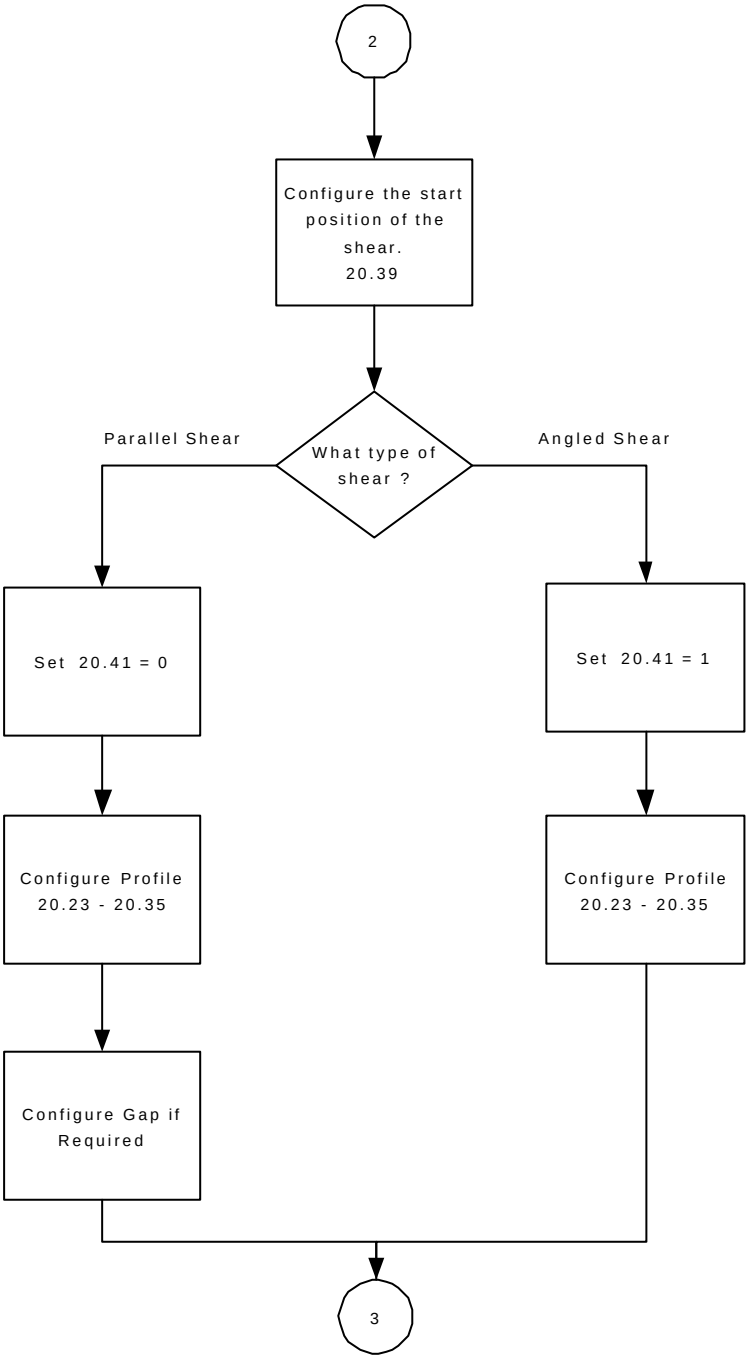

Commissioning Notes

Set the start position for the shear, this is relative to zeroposition after datuming.

Set the mode of the flying shear - Angled or Parrallel.

Set Mode.

Configure the flying shear profile. Note: some of the parameters have two meanings depending upon the selected mode.

In parallel shear mode a gap can be inserted between the products, if this is required configure parameters 19.23 - 19.25, and enable using 19.50.

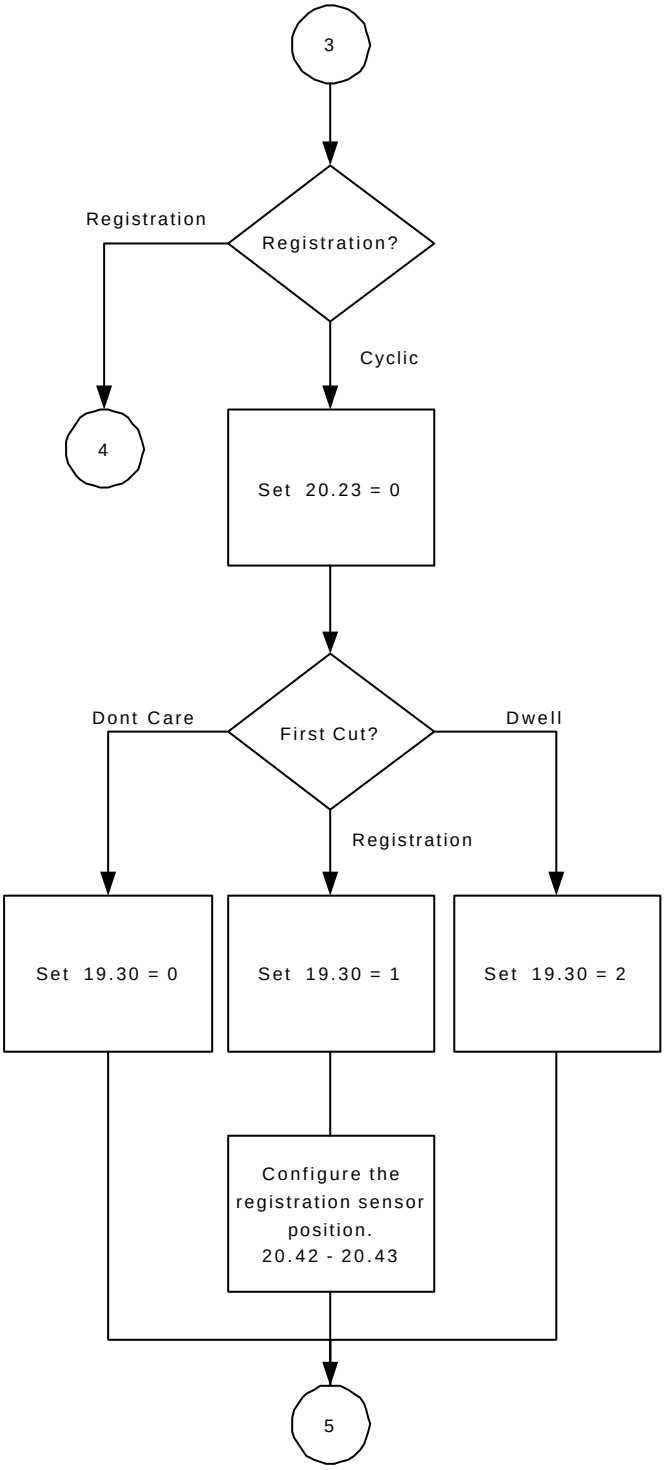

Commissioning Notes

Is Registration required for cutting the product to a set length?

Registration is used in applications where the cut is required to be aligned to a mark along the product. A sensor is used to detect the mark.

Cyclic cutting is used when the product is uniform along it's length without any distinguishing marks, such as in extruded plastics. However in this mode a registration sensor may still be used to detect the initial edge of the product.

In Cyclic mode only, we can decide the position of the first cut.

Dont Care - In this mode the shear profile will begin as soon as the shear is in run mode.

Registration - In this mode the shear will begin one cut length after the edge of the product is detected. The registration sensor is used to start the shear only.

Dwell - In this mode the shear will begin after a dwell of one cut length. Providing the edge of the product is aligned with the start position of the shear the resulting cut length will be right.

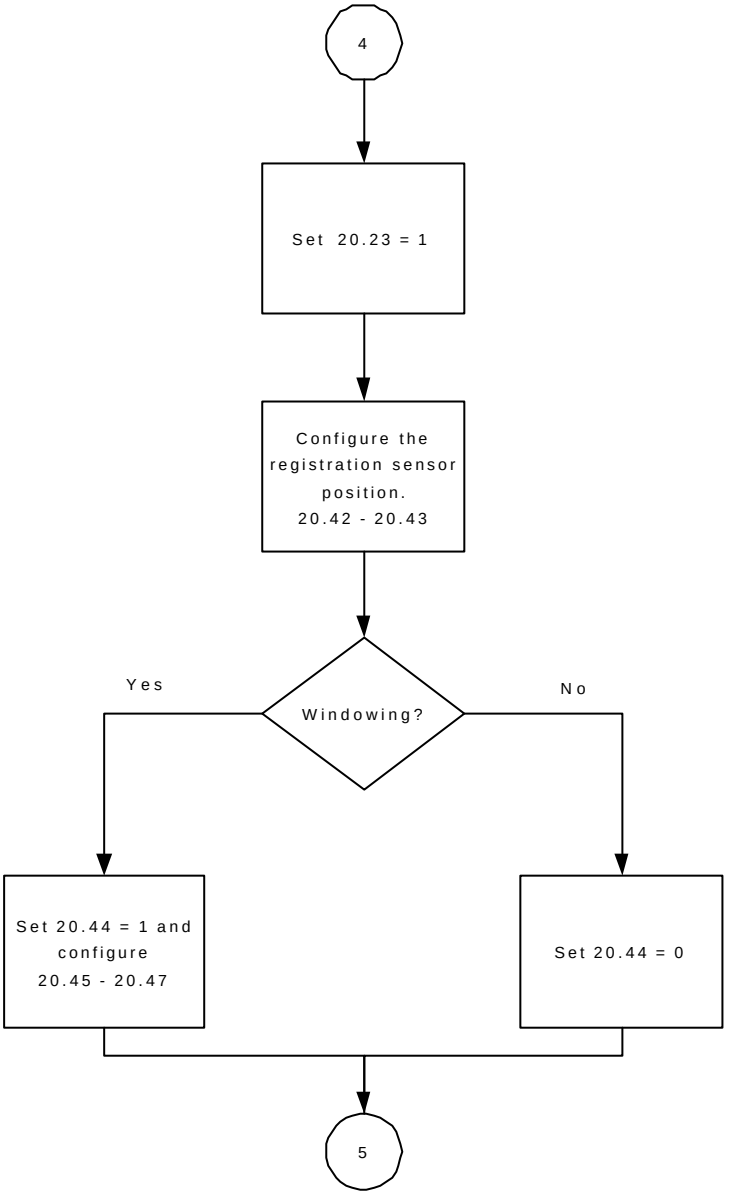

Commissioning Notes

Enable the Registration Mode by Setting 20.23.

The application software must know the position of the registration sensor, relative to the start position of the shear. A positive value means that the sensor is before the shear start position, a negative value means that it is after.

Is windowing required? This is used where there are several marks present on the product, and only one is required for registration, the window excludes the unwanted marks and picks up the required marks.

Enable / Disable Windowing, for windowing also need to set the window tollerance, and preset the master position, to pick-up the correct mark, refer to user guide for more information.

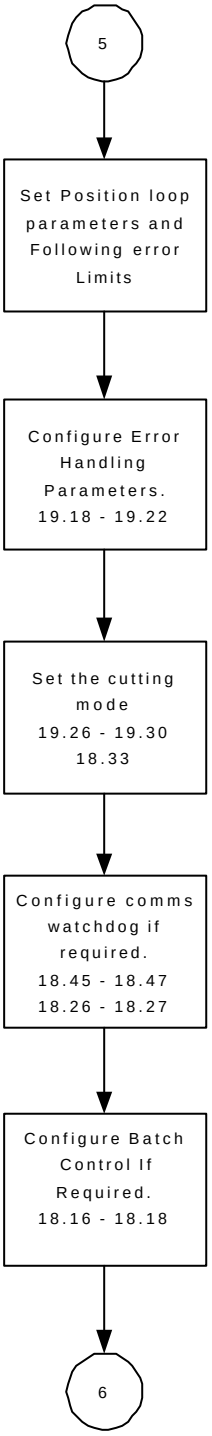

Commissioning Notes

The position loop parameters must be optimised to obtain the best performance, refer to the user guide for help with tuning.

The application software allows the user to enable and disable trips and alarms, and also allows selection of the mode of trip, it is important to spen some time setting up these parameters to give the required functionality and safe operation.

Configure the operation of the tool.

The Comms watchdog is used to monitor the health of a comms link, it is important to have this feature enabled when you intend to control the axis from a remote device.

Batch control can be used for set the quantity of cuts required for a production run.

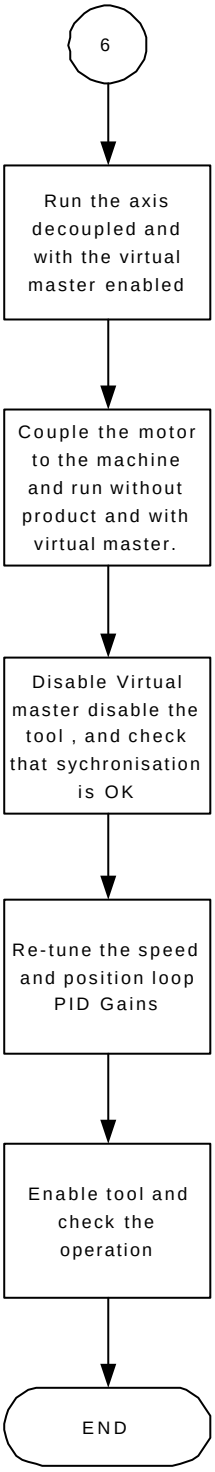

Commissioning Notes
Check that the flying shear profile looks OK, and that the axis is stable.
With the motor coupled to the machine check that the flying shear profile is OK, always check that the hardware limits operate, and stop the axis. You may also wish to reduce the current imit temporarily at ths point to prevent damage to the machine through incorrect operation.
Run product and check that the tool appears to be synchronised to the product.
Use a scope to monitor the following error, current and speed, tune to obtain best performance.
Run product with tool enabled, and check the operation

5.6 Application Set-up Parameters.

1. Scaling Refer to section 5.2.1			
Note: scaling is only updated on power-up, or by setting update scaling (parameter 18.37).	Master Numerator	18.13	
	Master Denominator	18.12	
	Slave Numerator	18.15	
	Slave Denominator	18.14	
2. Jogging Refer to section 6.2			
What speed do you want to Jog	Units / s	18.28	
Set the Jog Acceleration Rate	Units/s/s	18.29	
Set the Jog Deceleration Rate	Units/s/s	18.30	
3. Homing Refer to section 6.3			
Is the home switch in the forward or reverse direction Note: Forward direction is when the flying shear travels in the same direction as the normal flow of the product.	1 = Forwards 0 = Reverse	18.22	
What speed do you want to search for the home?	Home Search Speed Units/s	18.19	
What speed do you want to back-off the home switch?	Home Back-off Speed Units/s	18.21	
What Acceleration / Deceleration rates do you want to use for homing	Homing Accel / Decel Units/s/s	18.23	
The homing sequence can fail if the time it takes exceeds a preset time. How long do you wish to make the time-out.	Homing Time-out Time is ms	18.24	
The position that you want to pre-set the position loop to at the home position.	Homing Offset Units	18.25	
What is the polarity of the home switch	1 = Normally Closed 0 = Normally Open	18.31	

4. Registration Refer to section 6.4			
How far is the registration input located from the flying shear start position?	Registration Sensor Position. Units	20.43	
Do you want to add a fine trim to the registration sensor position?	Registration Sensor Position fine offset. Units/1000	20.42	
Do you want to use windowing so that the registration sensor excludes marks outside the window?	Enable Windowing. 1 = Enable 0 = Disable	20.44	
The position will roll over to zero when the cut length is reached, the window will be open before and after the rollover within a tolerance.	What Tolerance do you want to apply to the window? Units	20.45	
The master position may be preset to the value of parameter 20.47 when a transition from 0 – 1 occurs in parameter 20.46.	Master position preset.	20.47	
5. Flying Shear Profile Refer to section 6.5			
Do you want the flying shear to synchronise to a mark on the product, or do you want the flying shear to run cyclically?	1 = Cut on Mark 0 = Run Cyclically	20.23	
If cyclic cut is selected you can select when the first cut is executed.	0 = Cut Immediately 1 = Cut Using the registration sensor. 2 = Cut after one cut length.	19.30	
What is the start position for the flying shear?	Units	20.39	
What cut length do you want to achieve?	Enter Cut Length In Units	20.24	
Do you want to add a fine adjustment to the cut length?	Enter a Fine Offset To The Cut Length. Units / 1000	20.32	
What is the travel available for the shear? This is taken as the distance from the start position of the flying shear to the hardware / software forward limits.	Units	20.25	
What is the accel / decel rate for the shear during the fly (forward) part of the profile.	Units/s/s	20.26	
What is the accel / decel rate for the shear during the return (reverse) part of the profile.	Units/s/s	20.27	

What is the Maximum Speed of the master axis during this profile?	Units/s	20.28	
The synchronous part of the flying shear profile, is split into three areas, settling time, the cut time and the tool rise time.	Settling Time Milliseconds	20.29	
	Tool Down Time Milliseconds	20.30	
	Tool Up Time Milliseconds	20.31	
The flying shear will only attempt to activate the cut output if the following error (FE) is within the FE cut limit.	FE Cut Limit Encoder Counts	20.32	
How do you want the flying shear to accelerate, Linear or S-Ramped? Note: The S-ramp profile should not be used in conjunction with fieldbus options, as it may cause the drive to spuriously trip.	1 = S-Ramp 0 = Linear	20.35	
At what rate would you like the flying shear to decelerate if a limit switch is hit.	Set Fast Decel Rate Units/s/s	20.34	
6. Virtual Master Refer to section 6.6			
Enable Virtual Master	1 = Enabled 0 = Disabled	20.37	
Virtual Master Speed	Virtual Master Speed Units/s	20.38	
7. Tool Control Refer to section 6.7			
Enable the tool cut output when synchronised.	1 = Enable 0 = Disabled	19.49	
Tool manual cut.	1 = Cut 0 = No Cut	19.31	
After the tool has synchronised then the tool up input (parameter 20.40) is checked to ensure that the flying shear is able to decelerate, if the tool is not raised then we can handle the fault in one of two ways:	1 = extend the synchronisation to the master, and stop the master. 0 = Decelerate as normal.	18.33	

Cutter Mode	0 = Set output during the cut part of the cycle, ignore tool up/down signals 1 = Use tool up signal 2 = Use tool down signal 3 = use tool up and down signals	19.26	
Cut at start	0 = don't cut on start 1 = cut on start	19.27	
8. Position Loop Refer to section 6.8			
Position Loop Velocity Feed Forward Gain	Set to 1000	19.12	1000
Position Loop Proportional Gain	Proportional Gain Val / 1000	19.13	
Position Loop Proportional Term Limit	Set as a percentage of the drive maximum speed.	19.16	
FE Limit, Following Error Maximum Value Before An Error Condition will Occur	FE Limit Encoder Counts	19.11	
At Position Tolerance, this is the tolerance for the at position flag.	Units/1000	19.17	
Change forward direction of the axis	0 = Normal 1 = Reverse	19.44	
9. Hardware and Software Limits Refer to section 6.9			
At what positions do you want to put the software limits?	Forward Limit Units	19.14	
	Reverse Limit Units	19.15	
What is the polarity of the Hardware Limits	1 = Normally Closed 0 = Normally Open	19.42	
Do you want to disable the limit switches during homing; this will be needed if you use the limit switch as a homing switch, or if the homing switch is outside the limit switch.	Enable Limits during homing. 1 = Disable Limits 0 = Enable Limits	19.43	
10. Watchdog Refer to section 6.10			
Watchdog Enable	1 = Enable 0 = Disable	18.45	

Watchdog In Error Delay, if the watchdog clock from the remote device does not change state within the time allowed then an error state would result.	Watchdog Error Delay. Milliseconds	18.26	
Watchdog Out Time Period, This sets frequency that the clock will change state.	Watchdog time period. Milliseconds	18.27	
11. Batch Control Refer to section 6.11			
Enable Batch Control	1 = Enable 0 = Disable	18.16	
Batch Quantity		18.17	
Batch Reset	1 = Reset	18.18	

5.7 Command Parameters

Update Scaling & Direction	0 – 1 Transition = Update	18.27	Not Mapped
Manual Tool Cut Command	0 – 1 Transition = Cut	19.26	Not Mapped
Drive / Software Reset	1 = Reset	19.32	Not Mapped
Shear Run Command	1 = Run 0 = Stop	19.33	Mapped to F3
Go to Start Position	1 = Go to Start	19.34	Not Mapped
Local / Remote Control	1 = Remote	19.35	Controlled by fieldbus control word
Jog Forward	1 = Jog	19.36	Not Mapped
Jog Reverse	1 = Jog	19.37	Not Mapped
Home / Datum Command	0 - 1 Transition = Home	19.38	Mapped to Ain 2 through thresholds
Abort Motion	1 = Abort	19.39	Not Mapped
Enable Tool	1 = Enabled	19.49	Not Mapped
Preset Master Position	1 = Preset	20.46	Not Mapped

6 Functional Description

6.1 Overview

The diagram below illustrates the software architecture.

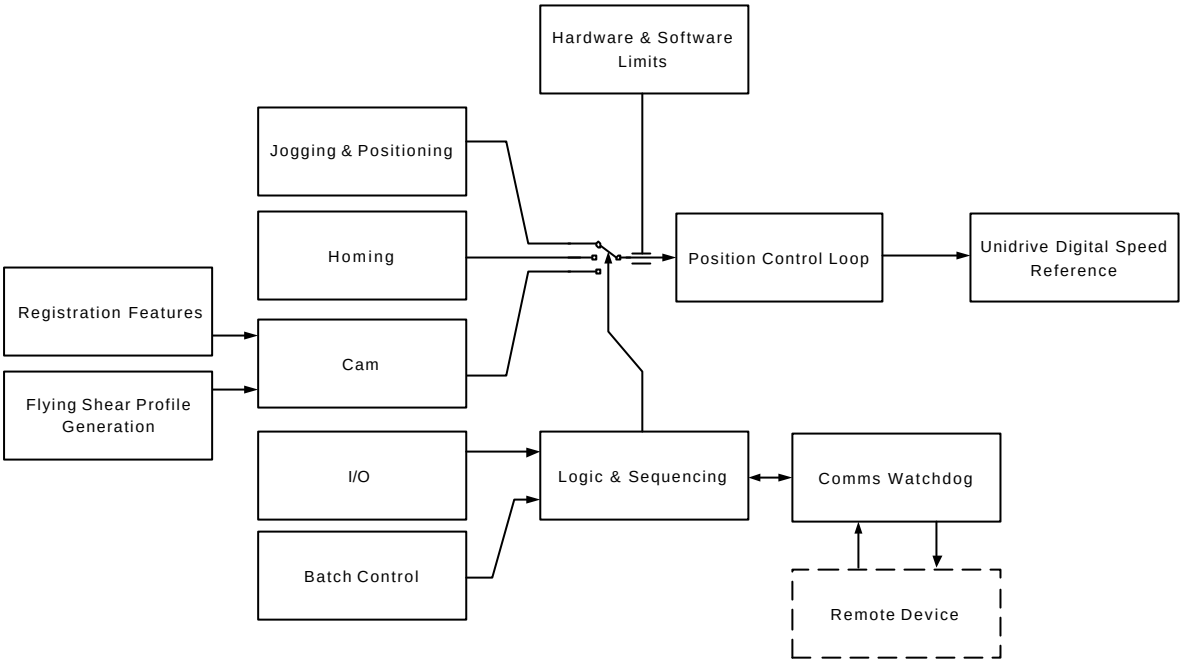

6.2 Jogging & Positioning

Jogging can be done at any time provided the flying shear axis is idle. After Jogging the axis can be sent back to the start position ready for a flying shear profile.

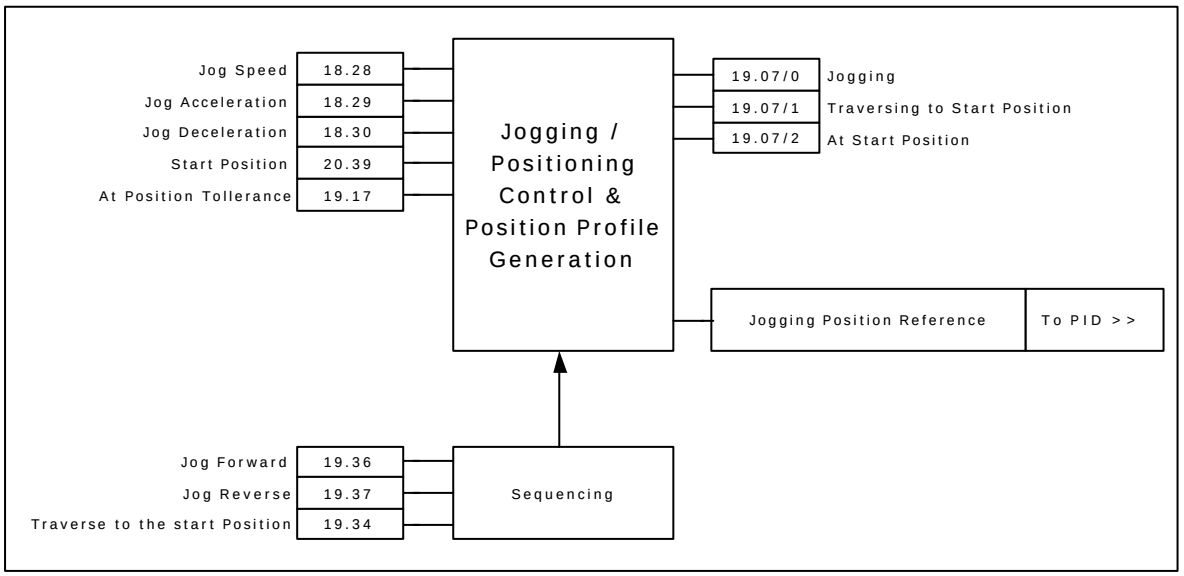

6.3 Homing / Datuming

During Homing:

1.

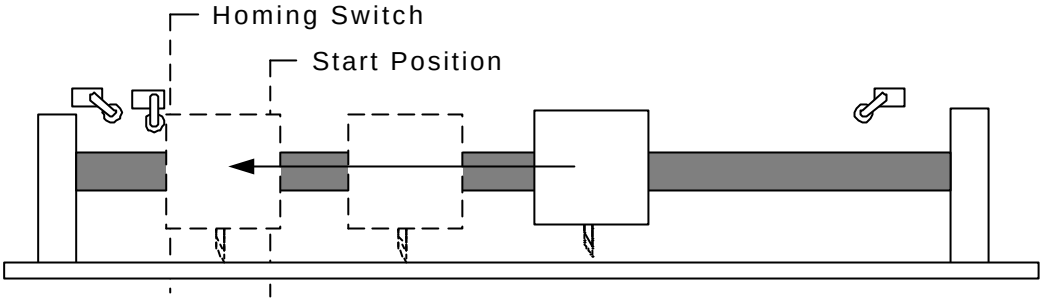

The flying shear carriage travels at home speed to find the home switch.

2.

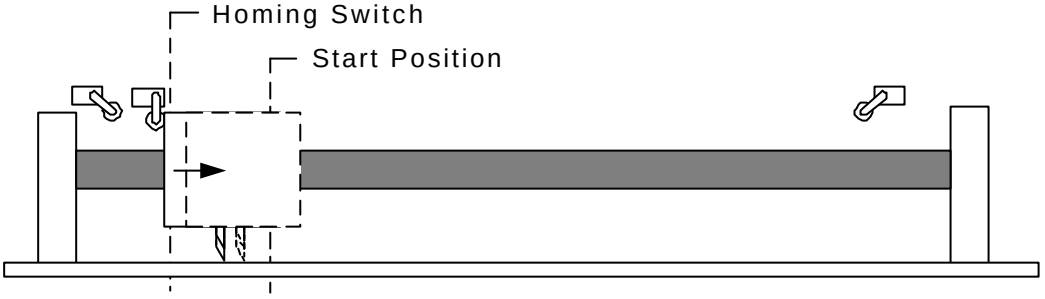

The flying shear reverses at back-off speed until the home switch is reset; the position is then pre-set to the value in parameter 18.25.

3.

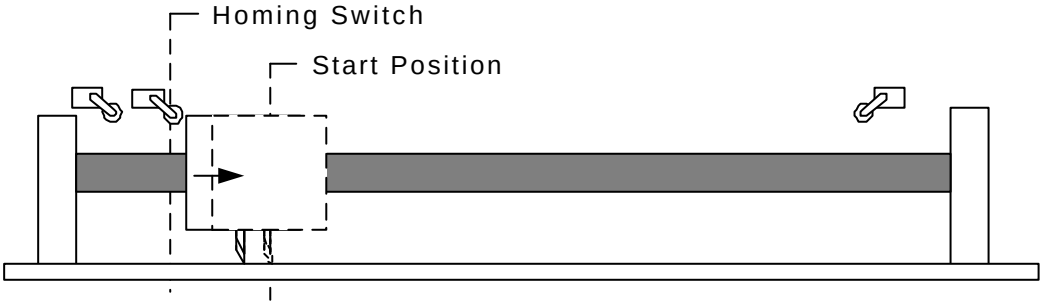

The carriage travels to the start position, ready to run.

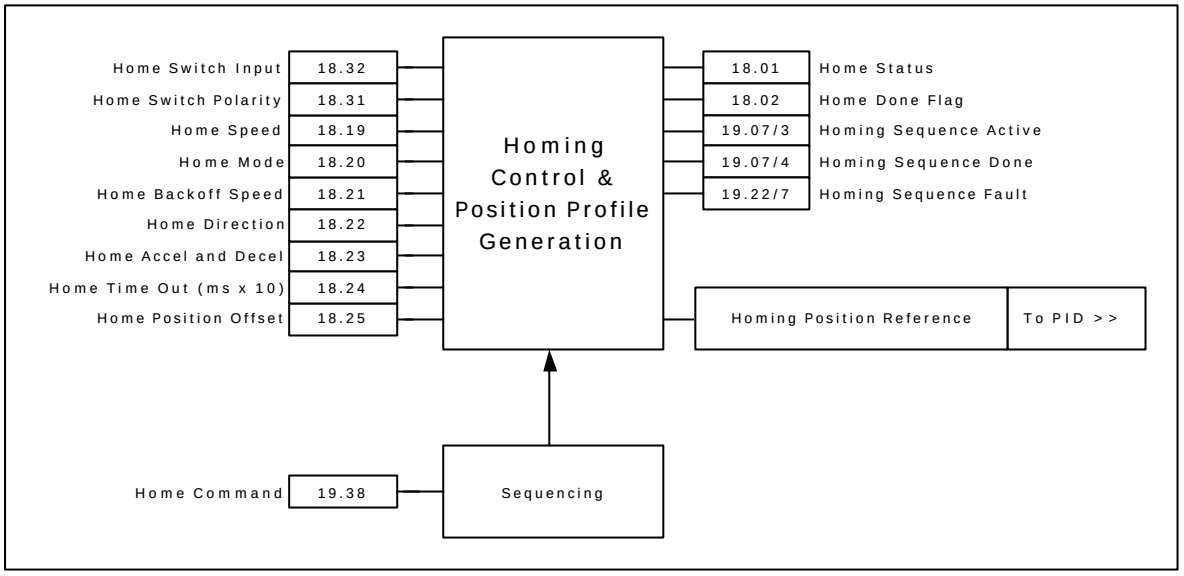

6.4 Registration

The registration sensor can have different functions depending upon the mode of the flying shear, cyclic or Registration.

In cyclic mode the flying shear can be used to detect the initial product edge and allow the first cut to be as accurate as the following cuts, setting parameter 19.30 = 1 does this.

In Registration mode the registration sensor is used to set the position where the flying shear will synchronise with the master. The sensor could be used to detect the position of a mark on a printed product, or alternatively to detect individual products that are randomly spaced out.

The position of the registration sensor is important. Once a registration event has occurred there must be enough space for the shear to accelerate, and synchronise, but if the sensor is located some distance from the shear some loss of accuracy may result.

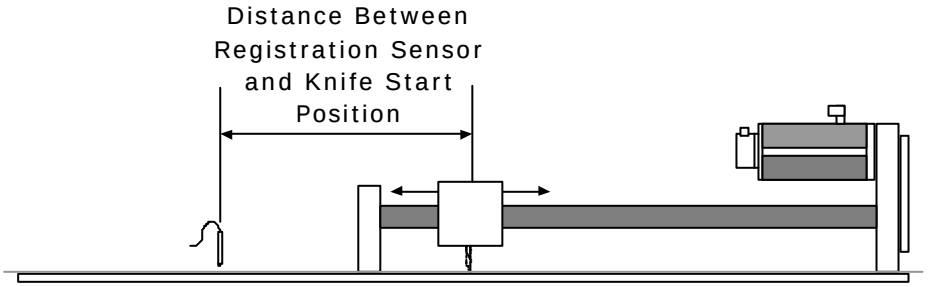

The distance between the registration sensor and the knife start position are entered into parameters and allow a resolution of up to 0.001 units. If this is entered accurately then the flying shear will synchronise with the position where the registration sensor detected the registration event. However, this is not always desirable, it may that you wish to detect a mark, but synchronise a fixed distance from that position, this can be achieved simply by adding or subtracting from the

distance between the sensor and the knife start position, though, there must still be enough distance for the flying shear to accelerate and synchronise with the new position.

Windowing

The registration sensor may detect several marks during each cycle, however, it is common that only one of the marks is relevant for registration purposes, in this case we can enable windowing, which will reject marks that are detected outside a small position window, the cut length is used to set the rollover position of the master position count, a parameter is then used to set the window tolerance, this sets how wide the band is where the master will accept a registration mark. As shown in the diagram below, the window is always located about the rollover position. When a valid registration mark is detected, the position of the master is then automatically reset to zero, so that any drift in position will be compensated.

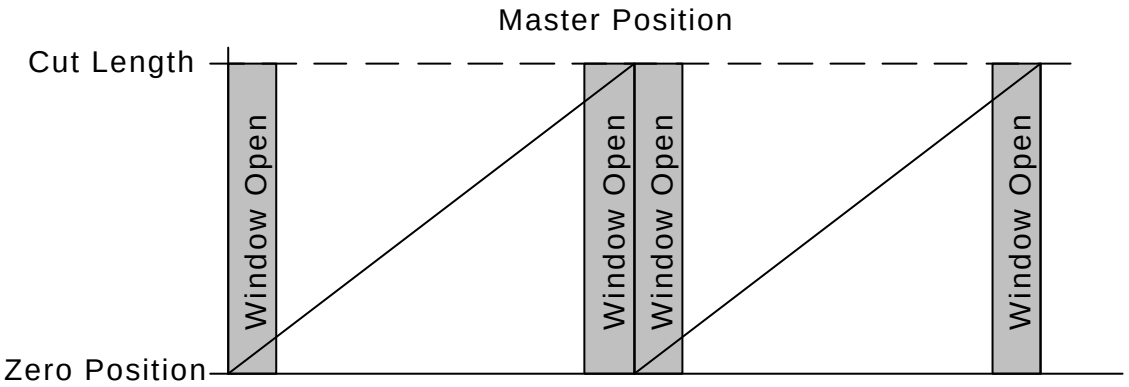

To start the flying shear using the correct mark, the master should be jogged so that the mark is aligned with the registration sensor, and the position of the master then reset to zero. When the flying shear is then started, it will cut in the correct position.

If the sensor is located further from the start position than one cut length, then there will be several registration positions that need to be recorder. Up to 25 registration events can be buffered at any time.

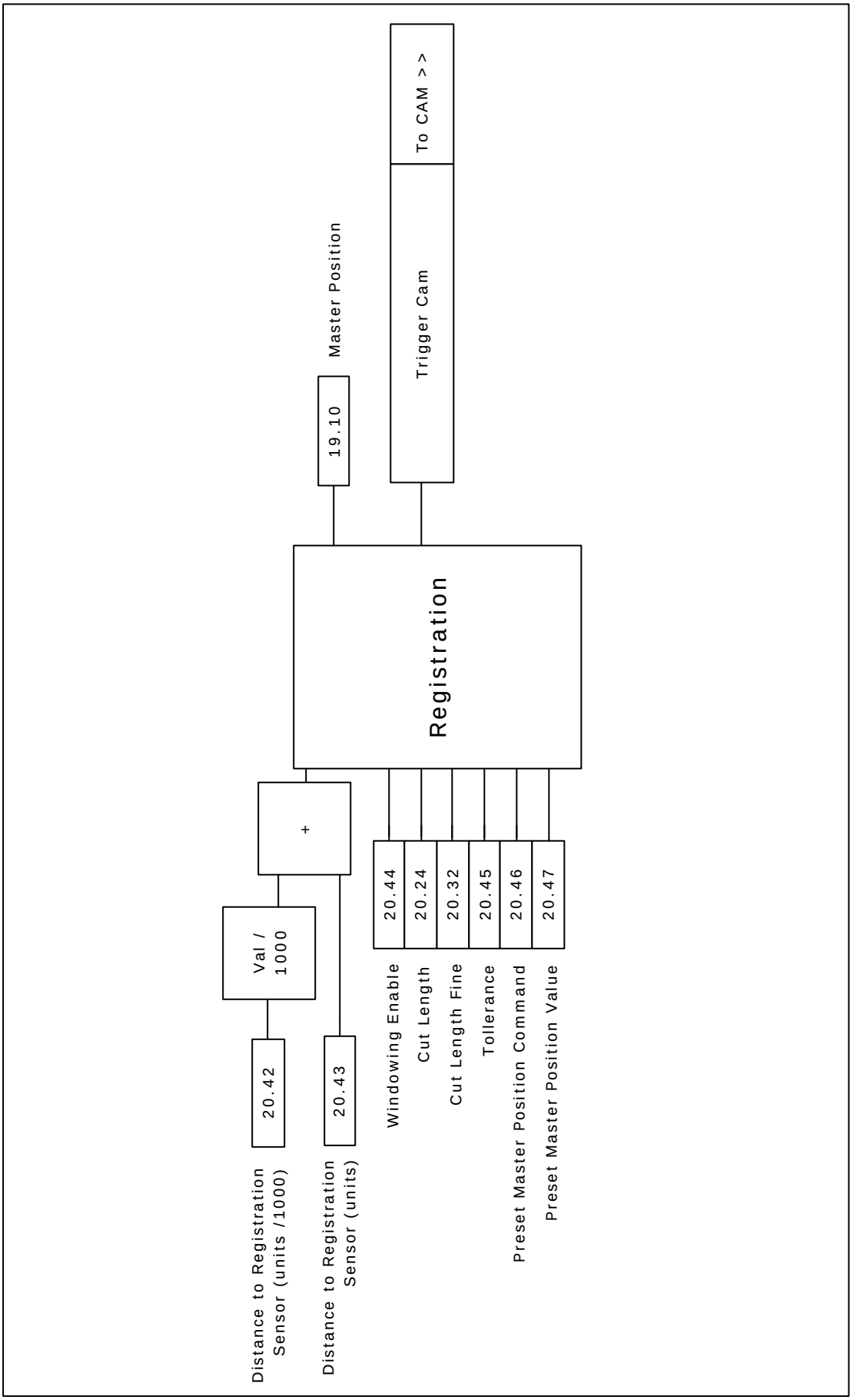
Distance to Registration Sensor (units /1000)
20.42
Distance to Registration Sensor (units)
20.43
Val / 1000
+
Registration
Windowing Enable
20.44
Cut Length
20.24
Cut Length Fine
20.32
Tollerance
20.45
Preset Master Position Command
20.46
Preset Master Position Value
20.47
19.10
Master Position
Trigger Cam
To CAM > >

6.5 Flying Shear Profile Calculation

The profile is calculated automatically from parameter data that is entered in real engineering units. The profile is checked to ensure that it can be achieved without exceeding any of the entered parameters, such as shear length.

From the data a CAM profile is generated with 10 points, as shown below. Not all of the points are always used, such as, we are able to use either a triangular or trapezoidal return profile, whichever is the most efficient, and so while the standard profile has a segment 8, this may or may not be required.

The cam can be recalculated while the flying shear is running. The new cam will be calculated and will take effect on the following flying shear cycle.

If the new calculated cam has an error, then the cam will not be accepted, and will generate a fault in the fault word, parameter 19.22. This can be used to generate an alarm or a trip as required.

The maximum speed for the return profile is determined by parameter 1.06.

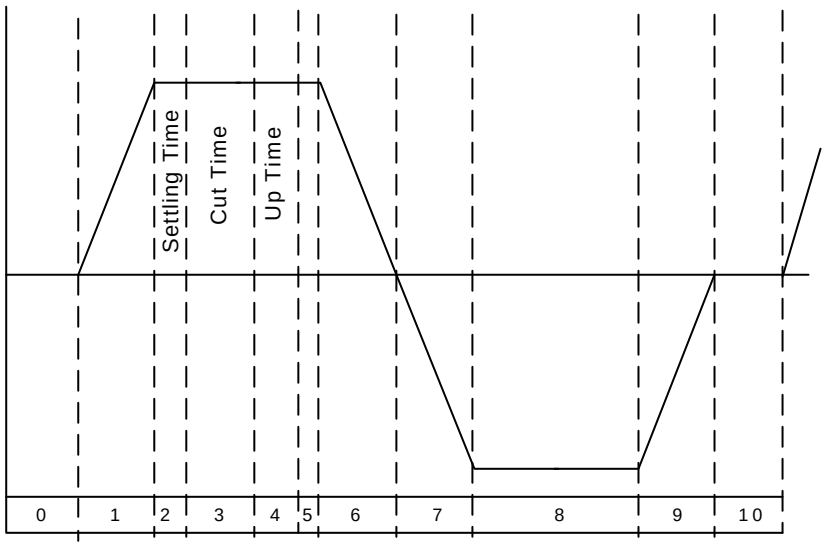

Profile Construction

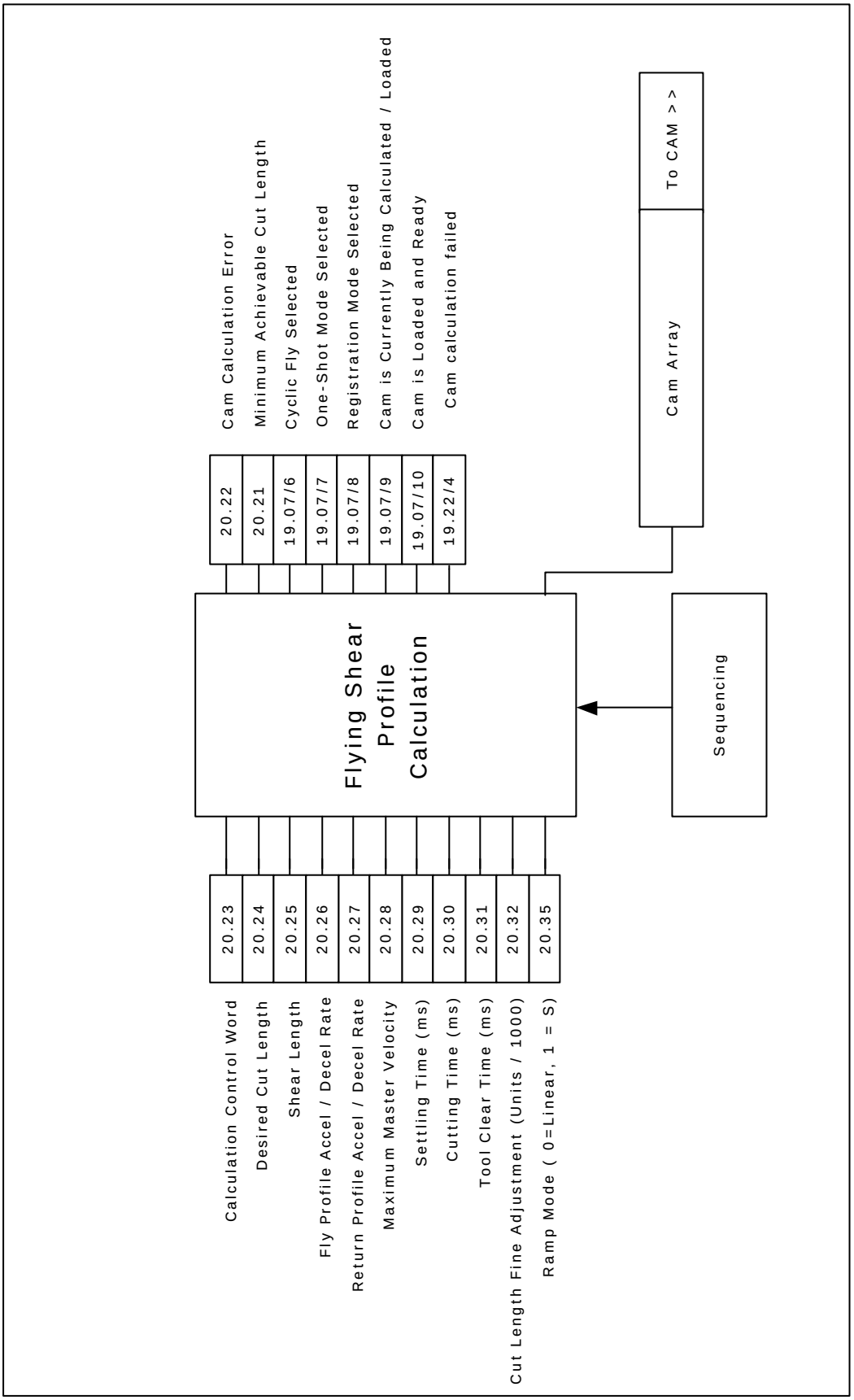
Calculation Control Word
20.23
Desired Cut Length
20.24
Shear Length
20.25
Fly Profile Accel / Decel Rate
20.26
Return Profile Accel / Decel Rate
20.27
Maximum Master Velocity
20.28
Settling Time (ms)
20.29
Cutting Time (ms)
20.30
Tool Clear Time (ms)
20.31
Cut Length Fine Adjustment (Units / 1000)
20.32
Ramp Mode (0=Linear, 1 = S)
20.35
Flying Shear Profile Calculation
Sequencing
Cam Array
To CAM >>
Cam Calculation Error
20.22
Minimum Achievable Cut Length
20.21
Cyclic Fly Selected
19.07/6
One-Shot Mode Selected
19.07/7
Registration Mode Selected
19.07/8
Cam is Currently Being Calculated / Loaded
19.07/9
Cam is Loaded and Ready
19.07/10
Cam calculation failed
19.22/4

6.6 Cam Control And Virtual Master Control

The Cam accepts inputs from the registration block and the profile calculator, and executes the cam with reference to the master position.

For commissioning purposes a virtual master may be used to check the system without the need to waste product, the virtual master does not have a ramp, and so the speed should not be changed by large increments while the profile is in operation.

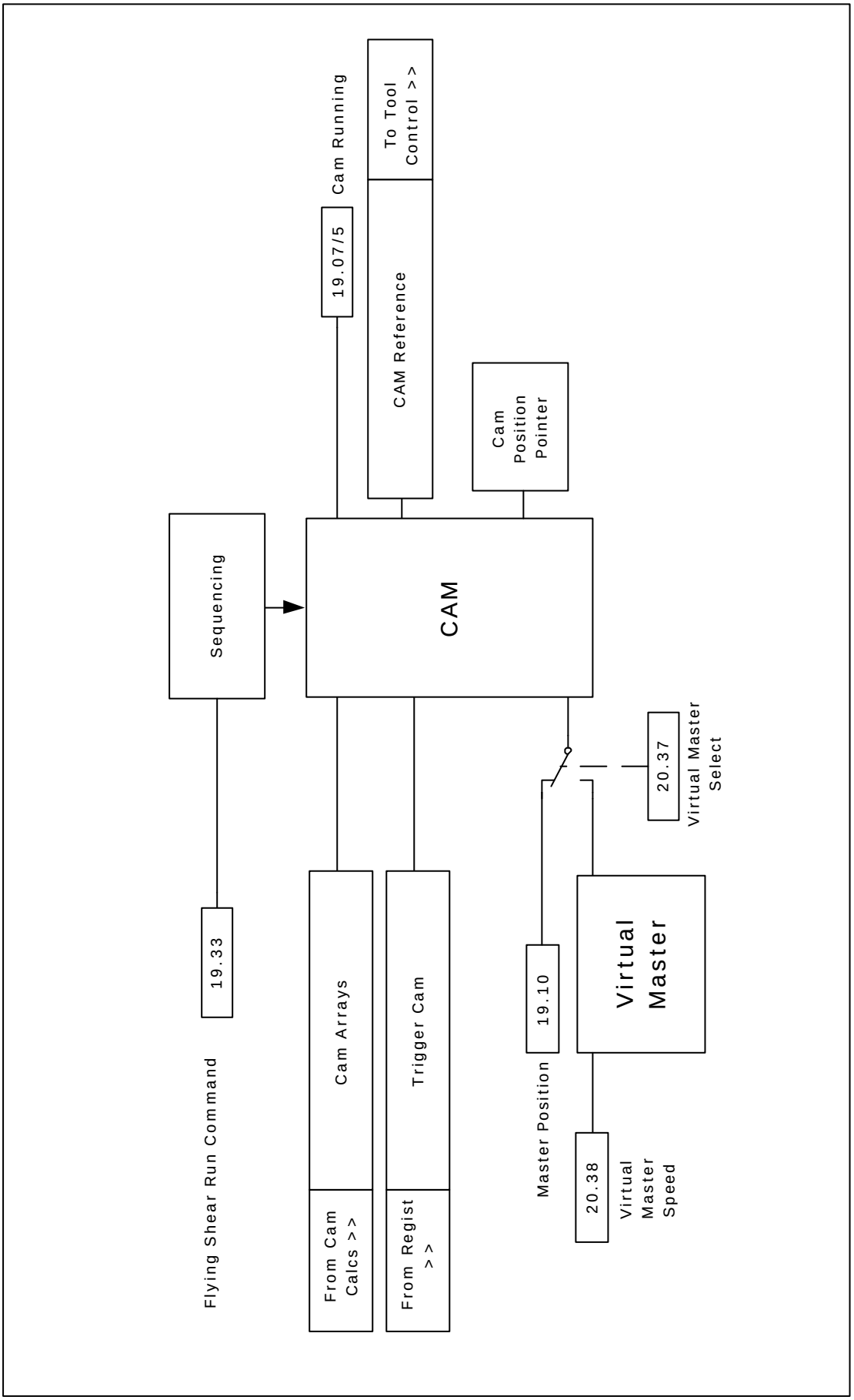
Flying Shear Run Command
19.33
Sequencing
Cam Arrays
From Cam Calcs >>
Trigger Cam
From Regist >>
CAM
19.07/5
Cam Running
CAM Reference
To Tool Control >>
Cam Position Pointer
Master Position
19.10
20.38
Virtual Master Speed
Virtual Master
20.37
Virtual Master Select

6.7 Gap Profile Generator

Some applications require a gap to be inserted between products by accelerating above synchronisation speed once the cut has been done, this is also useful where the product is viscous and so requires the product to be completely severed during the cut.

The gap is achieved using a trapezoidal profile generator which is added on to the main position reference to produce the gap, it is important to note that the gap profile is triggered by the tool down signal, or in applications where tool down is not used then it is triggered when the Cam is in tool-up part of the cycle (section 4). The Gap profile is not synchronised to the master like a Cam and so once triggered will continue even if the master is stationary.

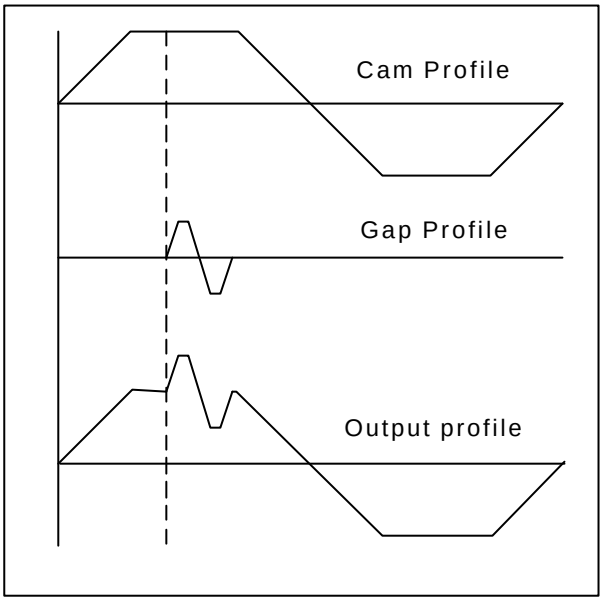

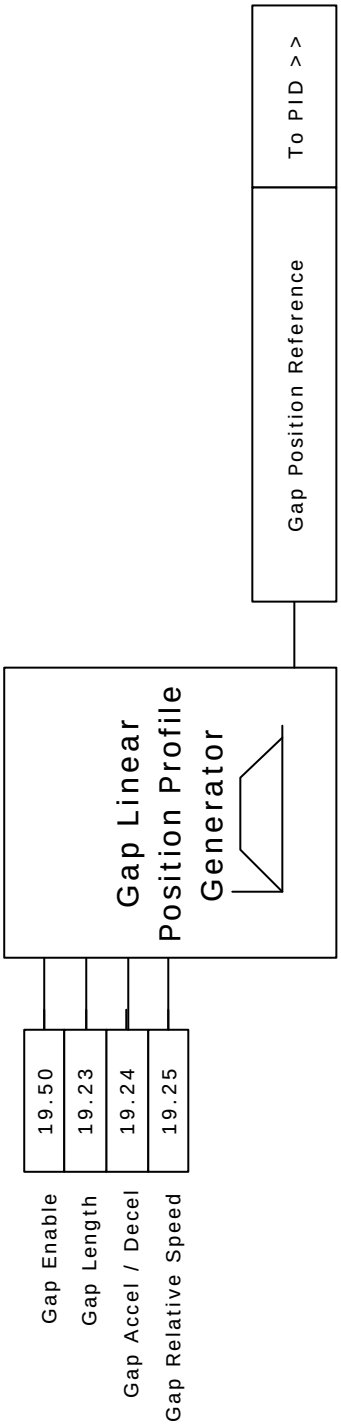
Gap Enable
19.50
Gap Length
19.23
Gap Accel / Decel
19.24
Gap Relative Speed
19.25
Gap Linear
Position Profile
Generator
Gap Position Reference
To PID >>

6.8 Tool Control

For many applications the tool requires very accurate control to ensure that the flying shear profile is optimised to achieve the smallest cut length at the highest line speed. By setting the time required for performing the cut and using a high-speed output direct from the UD70 to activate the cut mechanism we can optimise the performance of the shear. The UD70 output is a TTL active low output, which requires buffering to give a 24volt usable output, and also to provide a fail safe system an enable signal is required to prevent the knife being activated unexpectedly if the TTL signal is lost.

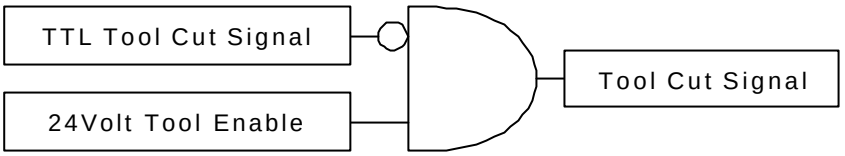

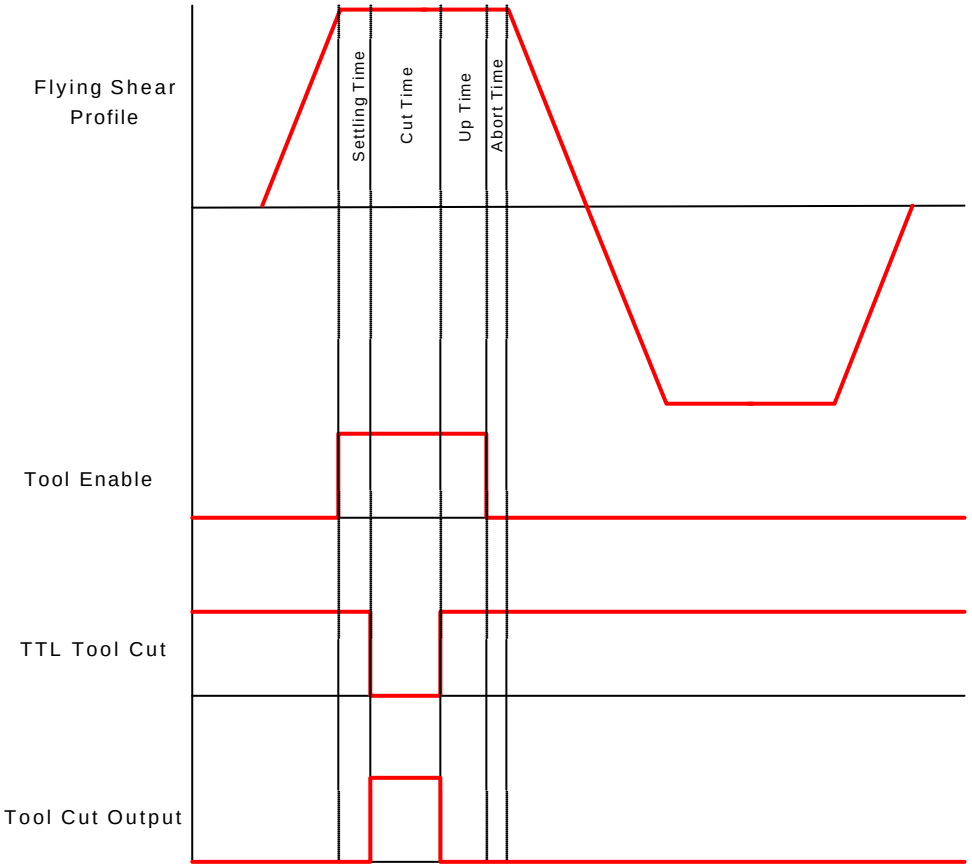

Note: The enable signal is generated through software and therefore cannot be relied upon to prevent injury to persons working on or around the machine. It is mandatory for a hardware safety circuit to be implemented to electrically isolate the moving parts to provide a safe environment.

6.8.1 Cutter Modes

Parameter 19.26 allows the user to select one of four cutter modes:

Mode 0

The cut output is switched on during the cut segment of the flying shear, and off at any other time. The tool up / down inputs are not used, and so the system will not detect that the tool is jammed in the product.

Mode 1

The cut output is switched on during the cut segment of the flying shear, and off at any other time. The tool up signal is used to detect that the tool is up at the end of the synchronised period, this can be used to synchronise the shear with the master for an extended period, and initiate a line stop, or alternatively can be used to flag an error or trip the drive.

Mode 2

The cut output is switched on at the start of the cut segment of the flying shear, and off as soon as the tool down signal is received. If by the end of the flying shear cut segment the tool down signal has not received, then the tool output is switched off anyway and an error condition is set, which can be used to alarm or trip the drive.

Mode 3

This is the same as Mode 1 and mode 2 together.

6.8.2 Start Cut Mode

If the start cut parameter 19.27 is set, then the flying shear will always perform an initial cut before going into run mode (19.33 = 1), this is so that any scrap can be removed, and can be used to ensure that the first cut is of the correct length.

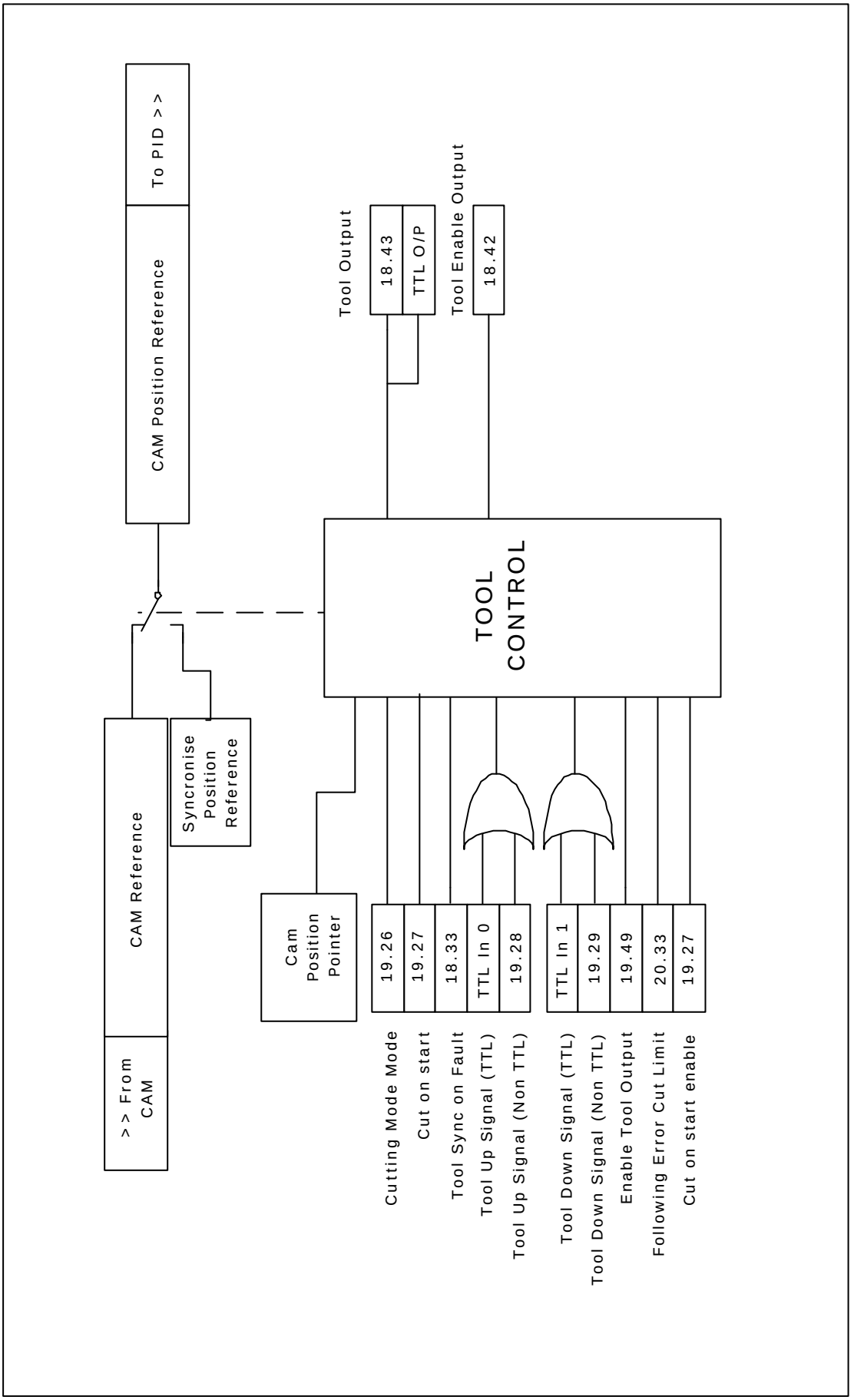
To PID >>
CAM Position Reference
Tool Output
18.43
TTL O/P
Tool Enable Output
18.42
TOOL CONTROL
Syncronise Position Reference
CAM Reference
>> From CAM
Cam Position Pointer
19.26
19.27
18.33
TTL In 0
19.28
TTL In 1
19.29
19.49
20.33
19.27
Cutting Mode Mode
Cut on start
Tool Sync on Fault
Tool Up Signal (TTL)
Tool Up Signal (Non TTL)
Tool Down Signal (TTL)
Tool Down Signal (Non TTL)
Enable Tool Output
Following Error Cut Limit
Cut on start enable

6.9 Reference Selection and PID

The reference is selected automatically by the sequencing.

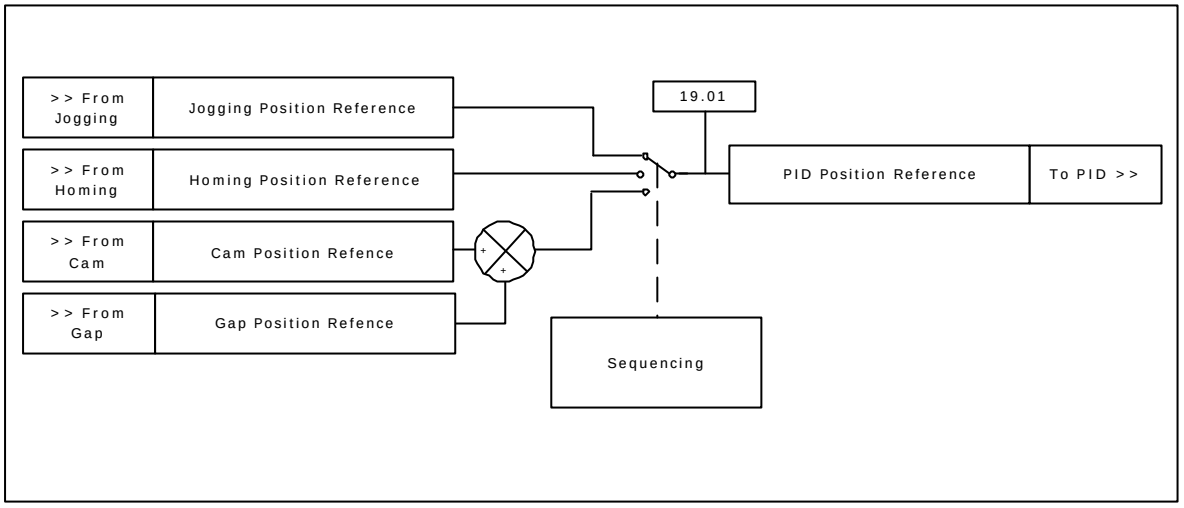

The position loop encompasses a Proportional (P) and Velocity Feed Forward (VFF) terms, in dynamic position loops such as flying shears integral and differential gains do not offer any benefits. The VFF gain is calculated so that it will produce the correct values if the gain is set to 1000, any other value will give a steady state error. The proportional gain will require tuning to achieve the best response for the mechanical system. Also do not forget to tune the speed loop and current loop gains, parameters 3.10 – 3.12 and 4.13 – 4.14 respectively. Refer to the Unidrive documentation for guidance.

To help tune the system a scope should be used connected to analogue outputs 1 & 2.

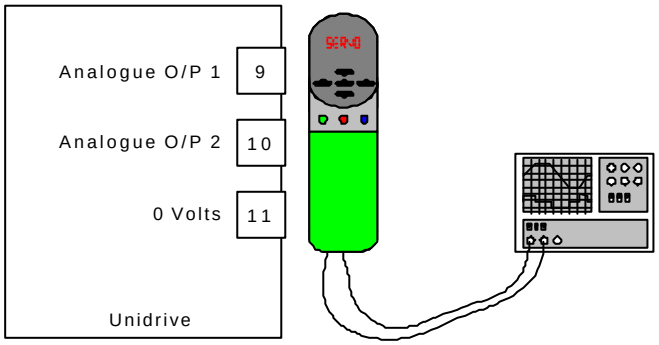

Analogue output 1 can be set to give following error and analogue output 2 set to give the speed profile of the flying shear.

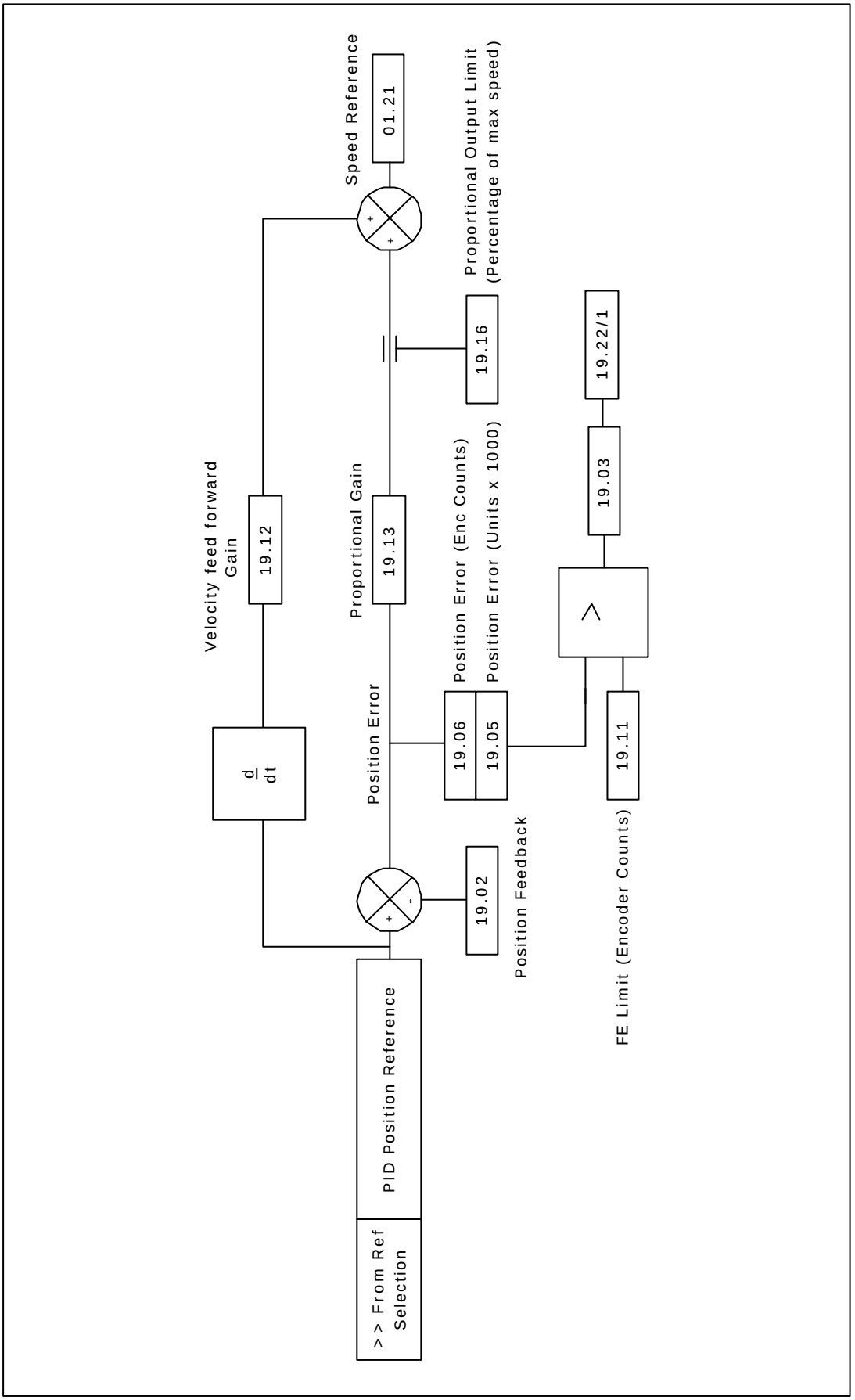
Velocity feed forward Gain
19.12
d/dt
Proportional Gain
19.13
Speed Reference
01.21
Proportional Output Limit (Percentage of max speed)
19.16
Position Error
Position Error (Enc Counts)
Position Error (Units x 1000)
19.06
19.05
19.02
Position Feedback
PID Position Reference
>> From Ref Selection
19.22/1
19.03
19.11
FE Limit (Encoder Counts)

6.10 Hardware and Software Limits

The Hardware and software limits will override any other flying shear functions, and will initiate a flying shear deceleration, at the fast decel rate set by parameter 20.34. It will also cause an alarm in parameter 19.22, this may be used to trip the drive, or cause an alarm, for more information please refer to the trouble shooting section of this manual.

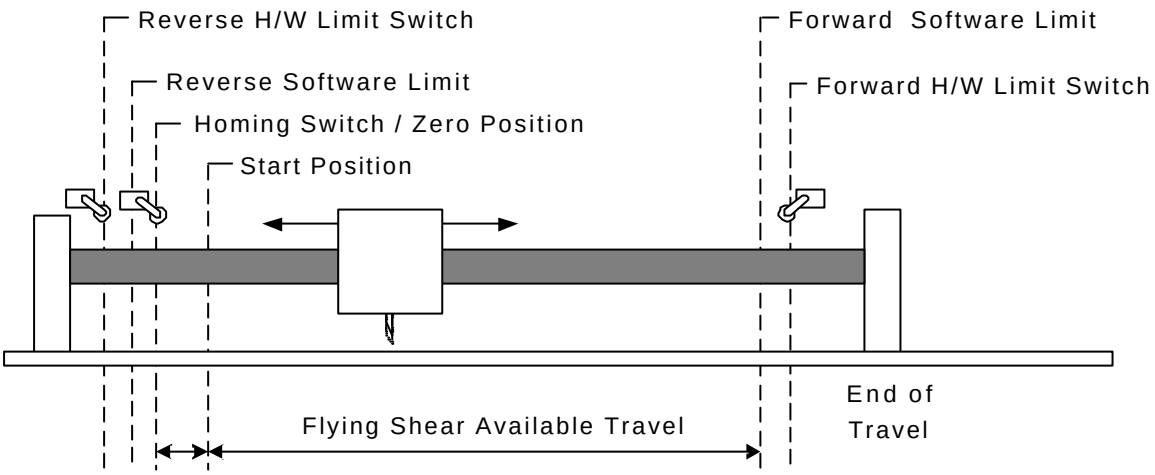

6.10.1 Hardware Limits

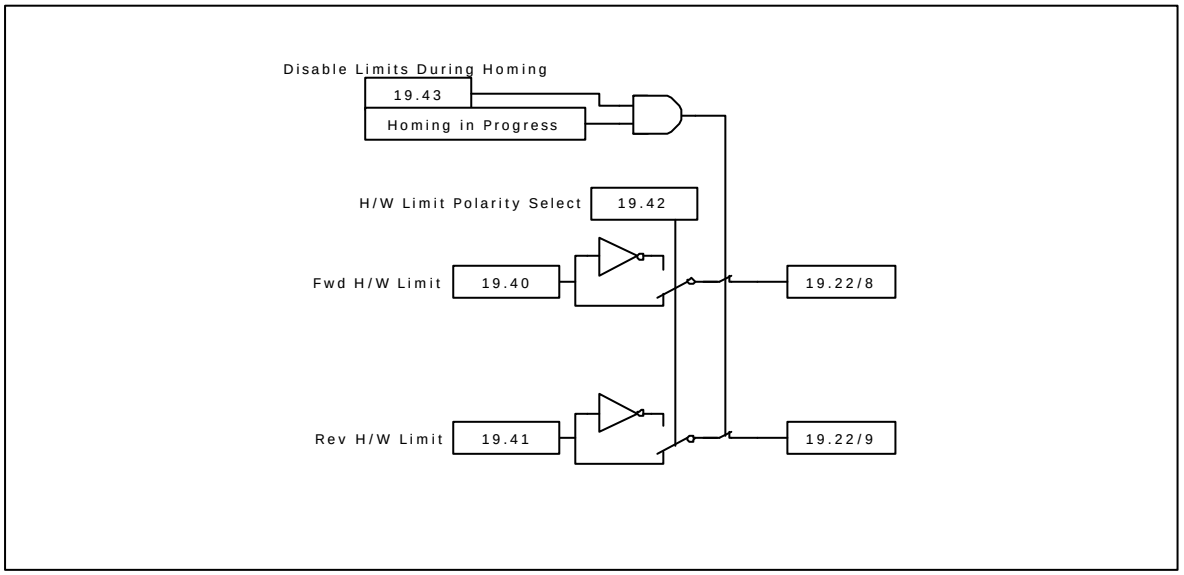

6.10.2 Software Limits

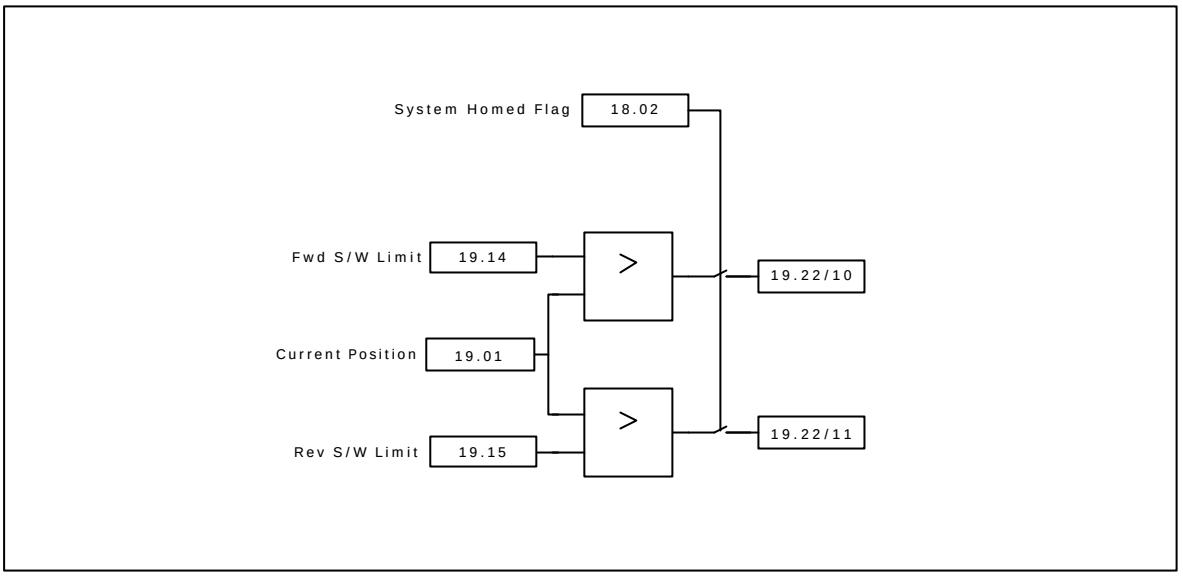

The software limits are only active after the homing sequence has been completed.

6.11 Communications Watchdog

The Watchdog is used to provide a mechanism to ensure the safe operation when movement is being controlled from a remote device. The watchdog checks that the remote device is online and capable of both sending and receiving data. This is done by sending a clock signal to the remote device, which responds by resending the same clock signal back, the returned signal is then monitored to make sure that the received data is of similar clock period to the sent data.

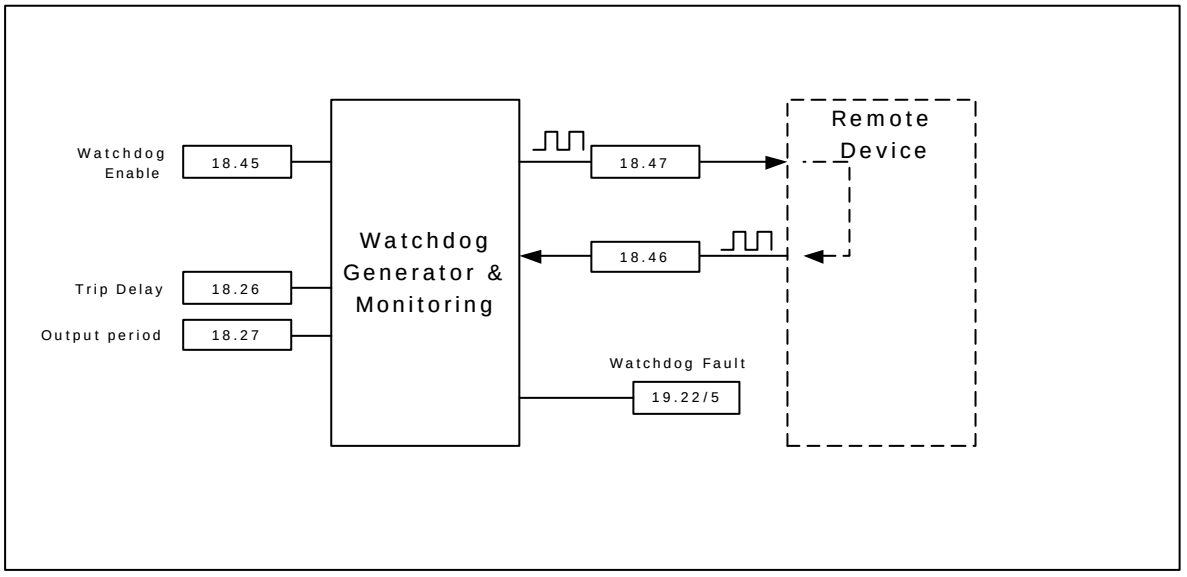

6.12 Batch and Master Control

The flying shear drive is able to interlock with the master drive, and provide control signals. Three control signals are given: System Healthy, Run Command and Last Cut:

System Healthy

If the system healthy is false then there is a serious problem, the master drive should decelerate at the maximum safe rate to ensure a minimum of damage.

Connecting this interlock is highly recommended.

Run

The Run signal may be used to command the master drive to run and stop, or may be used as a flying shear ready interlock. This signal is optional.

Last Cut

The last cut signal is used to indicate that the current cut will be the last, this can be used to reduce the speed of the master to a crawl until the run signal is removed, this will result in a minimum of waste production.

This signal is optional.

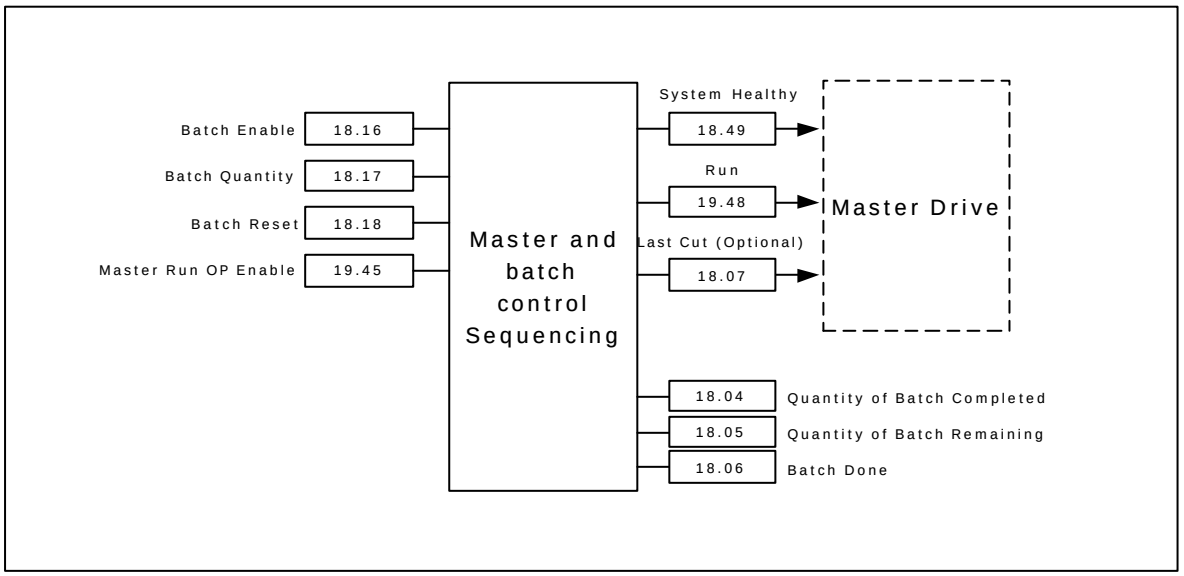

7 Parameter Descriptions

7.1 Relevant Unidrive Parameters

The application software on power-up sets these parameters.

1.10	Bipolar Reference Select
Application Setting	1 – Bipolar Enabled

1.14	Reference select
Application Setting	3 – Preset References

1.15	Preset Select
Application Setting	1 – Select 1.21 as reference

2.02	Enable Ramps
Application Setting	0 – Disable Ramps

2.04	Decel Ramp Mode
Application Setting	1 – Fast Ramps

5.18	Drive Switching Frequency
Application Setting	9Khz

6.01	Stopping Ramps
Application Setting	2 – stop without ramps

17.07	RS485 Comms Baud Rate
Application Setting	5 – 9600 Baud Rate

17.12	Position Loop Enable
Application Setting	12 – Run Pos loop 1.84ms time base

17.13	Application Auto Run
Application Setting	1 – Auto Run

17.14	Enable Global Trips
Application Setting	1 – Global trips enabled

17.20	Auto save menu 20 parameters on power down
Application Setting	1 – auto save

7.2 Application Parameters

7.2.1 Menu 18

18.01	Home State
Coding	RO, U
Range:	-3 to 5
Units:	TIU

This indicates the condition of the Home Sequence

0 = STOP State.

1 = Initialise.

2 = Search for Home State.

3 = Home detection state.

4 = Position Offset state.

5 = Preset final Home position/Completion state.

ERROR States less than 0.

-1 = Home disabled during home sequence.

-2 = Home time exceeded timeout.

-3 = Drive not Enabled.

18.02	Home Complete
Coding	RO, Bit

If set this parameter indicates that the home sequence has been completed.

18.03	Scan Time
Coding	RO, U
Range:	1 to 500
Units:	ms

Indicates the scan time of the Background task in mS

18.04	Batch Counter (Count UP)
Coding	RO, U
Range:	0 – 18.17

Batch Counter, indicates the number of cut cycles completed.

18.05	Batch Counter (Count DOWN)
Coding	RO, U
Range:	18.17 - 0

Indicates the quantity remaining in the batch.

18.06	Batch Done
Coding	RO, Bit

Indicates that the current batch is completed.

18.07	Last Cut
Coding	RO, Bit

Indicates that the last cut in the batch is in progress, this can be used to slow the master down, to reduce the waste product produced.

18.10	CTIU Function Keys
Coding	RO, U

The Function Keys from the CTIU are mapped to this parameter to provide some control.

18.11	Units
Coding	RO, U

The CTIU uses this parameter to store the units that are selected by the CTIU configuration. This parameter does not make any difference to the operation of the flying shear, and is simply used as a non-volatile memory for the display.

0 = Undefined User units

1 = mm x 100

2 = mm x 10

3 = mm

4 = mm / 10

5 = mm / 100

6 = inches x 10

7 = inches

8 = inches / 10

9 = inches / 100

18.12	Master Scaling Denominator
Coding	RW, U
Range:	0 to 32000
Default settings:	1

Master encoder feedback scaling denominator

Note: this parameter is only read on power up and when update scaling (parameter 18.37) is set to 1.

18.13	Master Scaling Numerator
Coding	RW, B
Range:	0 to 32000
Default settings:	16384

Master encoder feedback scaling numerator

Note: this parameter is only read on power up and when update scaling (parameter 18.37) is set to 1.

18.14	Slave Scaling Denominator
Coding	RW, U
Range:	0 to 32000
Default settings:	1

Slave encoder feedback scaling denominator

Note: this parameter is only read on power up and when update scaling (parameter 18.37) is set to 1.

18.15	Slave Scaling Numerator
Coding	RW, B
Range:	0 to 32000
Default settings:	16384

Slave encoder feedback scaling numerator

Note: this parameter is only read on power up and when update scaling (parameter 18.37) is set to 1.

18.16	Enable Batch Control
Coding	RW, Bit
Default settings:	0

Set to enable batch control to be used.

18.17	Batch Quantity
Coding	RW, U
Range:	0 – 32000
Default settings:	10

Quantity in a batch

18.18	Batch Reset
Coding	RW, Bit
Default settings:	0

Resets the batch completed.

18.19	Home Speed
Coding	RW, U
Range:	0 – 32000
Units:	Units / s
Default settings:	5

This parameter sets the speed that the home sequence will search for the home switch.

18.21	Home Back-off Speed
Coding	RW, U
Range:	0 – 32000
Units:	Units / s
Default settings:	1

This parameter set the speed that the axis will back-off the datum switch.

18.22	Home Search Direction
Coding	RW, Bit
Default settings:	0

This set the initial direction for searching for the home.

1 = Forwards

0 = Reverse

18.23	Home Acceleration / Deceleration
Coding	RW, U
Range:	0 – 32000
Units:	Units / s^2

Default settings:	50

This parameter defines the acceleration and deceleration ramps for the homing sequence.

18.24	Home Time
Coding	RW, U
Range:	0 – 32000
Units:	0.01 Seconds
Default settings:	500

This parameter defines the time allowed for the homing sequence to complete.

18.25	Home Offset
Coding	RW, U
Range:	0 – 32000
Units:	Units
Default settings:	0

This parameter sets the zero position for this axis.

18.26	Watchdog Trip Delay
Coding	RW, U
Range:	0 – 32000
Units:	MS
Default settings:	2200
18.27	**Watchdog Out Time Period**
Coding	RW, U
Range:	0 – 32000
Units:	MS
Default settings:	1000

The Watchdog is used for monitoring the health of a communications link.

The drive generates a clock signal with an on / off time set by parameter 18.27. The clock signal is read by the remote device, which then sends the clock signal back to the drive. If the received clock from the remote device does not change state within the time set by parameter 18.26 then a fault condition occurs. This checks the communication link is able to read and write to/from the drive.

18.28	Jog Speed
Coding	RW, U
Range:	0 – 32000
Units:	Units / s
Default settings:	5

Set the jog speeds for both forward and reverse.

18.29	Jog Acceleration Rate
Coding	RW, U
Range:	0 - 32000
Units:	Units / s^2
Default settings:	100

Sets the acceleration rate for the flying shear axis jog.

18.30	Jog Deceleration Rate
Coding	RW, U
Range:	0 – 32000
Units:	Units / s^2
Default settings:	100

Sets the deceleration rate for the flying shear axis jog.

18.31	Home Switch Polarity
Coding	RW, B
Default settings:	1

Sets the polarity of the home switch input.

1 = Normally Closed

0 = Normally Open

For safety reasons a fail-safe normally closed switch is recommended.

18.32	Home Switch Input
Coding	RW, B
Default settings:	1

This parameter is used as the home switch input, if a digital input is being used then it should be written to this parameter.

18.33	Tool Sync Enable
Coding	RW, B
Default settings:	0

This parameter sets the failure mode of the flying shear when the tool-raised signal is not received at the end of the normal synchronised period. There are two options:

Decelerate the flying shear, or we can stay synchronised to the master and stop the line, the choice will depend upon the risk of damage to the tool, and the ability to stop the production line within the available travel of the flying shear.

0 = Decelerate as normal

1 = Synchronise to the line

18.34	Flying Shear Ready
Coding	RW, B
Default settings:	0

If this parameter is set to one then the flying shear will attempt to start when parameter 19.33 is set to one.

18.36	Feedback Source
Coding	RW, B
Default settings:	0

This parameter selects the source for the feedback signals. If a SinCos encoder is used as a master then this parameter should be set to 1.

Note: this parameter is only read on power up and when update scaling (parameter 18.37) is set to 1.

18.37	Update Scaling
Coding	RW, B
Default settings:	0

This parameter is set to one to update the forward direction of the axis, the feedback source and the scaling of the axis, it will return to zero automatically when completed.

18.43	Tool Cut Command
Coding	RW, B
Default settings:	0

Can be used as a source for a digital output to trigger the tool to cut the product.

18.44	Default Parameters
Coding	RW, B
Default settings:	0

Set to 1 to set the parameters to default.

18.45	Watchdog enable
Coding	RO, B
Default settings:	0

A Communications watchdog can be used to monitor the health of a communications link, the watchdog simply sends a clocked (0,1,0,1) signal to the remote device, and expects to get a similar signal returned. This parameter enables the watchdog monitoring.

18.46	Watchdog In
Coding	RO, B

This parameter should be written to with a toggling bit from the remote communication device, the remote device may simply send back the clock pulse that it receives from parameter 18.48.

18.47	Watchdog Out
Coding	RW, B

This parameter should be sent to the remote device, the parameter will toggle at a time base set by parameter 18.27

18.49	System Healthy
Coding	RW, B
Default settings:	0

This Parameter should be used as an interlock to stop the master, if this parameter = 0 then the flying shear is in a fault condition and the line / master should stop as quickly as possible.

7.2.2 Menu 19

19.01	Position Reference
Coding	RO, U
Range:	0 – 32000
Units:	Units

This parameter indicates the demand position of the flying shear axis.

19.02	Actual Position
Coding	RO, U
Range:	0 – 32000
Units:	Units

This parameter returns the actual position of the flying shear axis.

19.03	FE Active
Coding	RO, B

If Set to 1, this parameter indicates that the following error is outside the following error limit, set by parameter 19.11

19.04	Tool Enable
Coding	RO, B

For safety reasons the TTL output from the UD70 module must have a second output from the drive to enable the tool to be energised, this parameter is used as the enable.

19.05	Following Error
Coding	RO, U
Range:	0 – 32000
Units:	Units * 1000

This parameter returns the following error of the flying shear axis.

19.06	Following Error
Coding	RO, U
Range:	0 –32000
Units:	Encoder Counts

This parameter returns the following error, based on the number of encoder counts error for maximum resolution.

19.07	Flying Shear Status Word
Coding	RO, U

This Parameter returns the current activity of the flying shear; it is coded in a bit-wise form.

Bit	Description
0	Jogging
1	Going to Start Position
2	At start Position
3	Homing Sequence Active
4	System Homed
5	Running
6	Cyclic Fly mode selected
7	0 = Local 1 = Remote
8	Registration Fly Mode Selected
9	New Cam is Being calculated / Loaded
10	Cam is initialised
11	On Last Cut
12	Watchdog Out
13	Shear Ready to Run
14	Alarm Active

19.10	Master Position
Coding	RO, U
Range:	0 – 32000
Units:	Units

This parameter returns the position of the master axis.

19.11	FE Limit
Coding	RW, U
Range:	0 - 32000
Units:	Encoder counts
Default settings:	100

This parameter sets the allowable flowing error, before a fault condition is reported.

19.12	Velocity Feed Forward Gain
Coding	RW, U
Range:	0 - 32000
Units:	Factor / 1000
Default settings:	1000

Assuming the feedback for the flying shear is generated from the feedback device mounted on the back of the motor, this parameter should always be set to 1000; any other value will produce a steady state following error.

19.13	Proportional Gain
Coding	RW, U
Range:	0 – 32000
Units:	0.1 Seconds
Default settings:	16000

This parameter is the proportional gain for the position loop.

19.14	Forward Software Limit Position
Coding	RW, U
Range:	+/- 32000
Units:	Units
Default settings:	0

Forward Software limit for the flying shear.

19.15	Reverse Software Limit Position
Coding	RW, U
Range:	+ / - 32000
Units:	Units
Default settings:	0

Reverse Software limit for the flying shear axis

19.16	Proportional Gain Output Limit
Coding	RW, U
Range:	0 – 100
Units:	% of max speed
Default settings:	10

In the position loop the feed-forward gain will give the drive approximately the correct speed reference, the proportional gain is then added to the feed-forward as a small trim to keep the axis at the correct position, The proportional gain should not need to generate any more that a fraction of the full speed of the axis, a typical value for this parameter should by between 15 – 25% of motor maximum speed.

19.17	At Position Tolerance
Coding	RW, U
Range:	0 – 32000
Units:	Units / 1000
Default settings:	1

This defines the allowable error when the axis is in a set position.

19.18	CTIU Alarm Word
Coding	RO, U
19.19	**Alarm / Trip Selection Mask Word**
Coding	RW, U
Default settings:	16383
19.20	**Trip Conditional Select Mask Word**
Coding	RW, U
Default settings:	8064
19.21	**Alarm / Trip Enable Mask**
Coding	RW, U
Default settings:	16383
19.22	**Raw Alarm / Trip Data**
Coding	RO, U

Fault Handling

The parameters 19.18 – 19.21 are arranged with the following bit functions.

0 Tool did not rise at the end of the cycle – alarm only

1 Following Error Outside Limit

2 Other tool error

3 Start-up cut not done as master not stationary

4 Cam calculation parameter fault

5 Master Speed too fast

6 Sequence abort parameter fault

7 Homing Fault

8 Fwd H/W Lim

9 Rev H/W Lim

10 Fwd S/W Lim

11 Rev S/W Lim

12 Remote Fieldbus Trip

13 Watchdog fault error

Parameter 19.18 is the alarm word, and gives the status of all the current alarms immediately that the alarms occur.

Parameter 19.19 selects whether the alarm should also trip the drive, set to 1 to trip the drive and alarm, set to zero for alarm only.

Parameter 19.20 allows you to select when you want the trip to occur. If set to 1 then the trip will occur at the same time as the alarm, if set to 0 then the trip will occur at the end of the current flying shear cycle.

Parameter 19.21 allows you to enable / disable alarms and trips, set to 1 to enable alarm and/or trip.

Note: The alarms for the hardware and software limits cannot be disabled

Parameter 19.22 contains the raw fault data that is used to generate the above parameters.

19.23	Gap Length
Range:	0 – 32000
Coding	RW, U
Default settings:	0

If Gap mode is enabled then this parameter is used to set the length of the gap. A Gap between cuts is produced by adding a trapezoidal profile on to the cam. Length, acceleration rate and speed are required to determine the required profile.

19.24	Gap Accel
Coding	RW, B
Range:	0 – 32000
Default settings:	0

This parameter is used to set the acceleration and deceleration rate for the gap producing profile.

19.25	Gap Speed
Coding	RW, B
Range:	0 – 32000
Default settings:	0

This parameter is used to set the relative speed for the gap producing profile.

19.26	Cut Mode
Coding	RW, U
Range:	0 – 3
Default settings:	0

The cut mode determines how the up and down inputs are used:

0 = Does not use tool up/down inputs for feedback

1 = Use cutter up input only to check that the tool is clear prior to decelerating

2 = Use cutter down input only to give the shear the signal when to remove the tool cut signal. If the tool down signal is not present at the end of the cut period then the tool will rise and a fault condition will be set.

3 = Use both up and down.

19.27	Cut on start of shear
Coding	RW, B
Range:	0 – 1
Default settings:	0

If this input is set to one then the shear will always perform an initial cut prior to going into run mode, this is so that the first cut can be of the correct length.

19.30	First Cut Mode
Coding	RW, U
Range:	0 – 3

This parameter is used to define how the first cut is performed when the flying shear is operating in cyclic mode. This may be used to ensure that the first cut is of the correct length, and therefore eliminate any waste caused by the first cut.

0 = Cut Immediately (don't worry about waste).

1 = Use registration once only to detect product edge, and cut one length later.

2 = Cut after a dwell of one cut length, this is used when the product start off aligned to the cutting tool.

19.31	Manual Tool Cut Command
Coding	RW, B
Default settings:	0

Perform a manual Cut.

Ensure that interlocks are present to prevent injury to persons.

19.32	Drive / Fault Reset
Coding	RO, B
Default settings:	0

Set this parameter to reset the drive and any fault conditions.

19.33	Shear Run Command
Coding	RW, B
Default settings:	0

If this parameter is set to one, on the rising edge, provided all of the interlocks are made the flying shear will start to run, and will continue to run unless a fault condition develops or the run command is removed.

Interlocks:

Hardware / software limits

Axis has been homed

Motion Abort 19.39 = 0

Axis is ready

When the axis starts it will:

- Go to the start position, defined by parameter 20.39.
- If Cut on start (parameter 19.27) is set then it will perform an initial cut cycle.
- Parameter 19.48 will be set to 1, this may be used as an interlock for the master to start. The flying shear is then ready to run.

19.34	Go to Start Position
Coding	RW, B
Default settings:	0

This parameter is used to send the flying shear axis to the start position that is defined by parameter 20.39. This parameter requires a rising edge to initiate the move.

19.35	Local / Remote Control Select
Coding	RW, B
Default settings:	0

This parameter defines where the command signals are generated, they may be generated from a control word from a fieldbus using parameter _Sxx%, _Rxx%

Note: The watchdog must be enabled to allow the Local / Remote mode to be set to remote, this is done to prevent the flying shear from running / jogging or homing unexpectedly.

19.36	Jog Forward Command
Coding	RW, B
Default settings:	0

Set to 1 to jog the flying shear axis forward. Requires a rising edge to initiate the motion, and will continue while the signal is present

19.37	Jog Reverse Command
Coding	RW, B
Default settings:	0

Set to 1 to jog the flying shear axis Reverse. Requires a rising edge to initiate the motion, and will continue while the signal is present

19.38	Home / Datum Command
Coding	RW, B

Set to 1 to home the flying shear axis. Requires a rising edge, the signal does not need to be maintained.

19.39	Abort Motion Command
Coding	RW, B

Set to 1 to stop all motion and trip the drive.

19.40	Fwd Hardware Limit Input
Coding	RW, B

This parameter is used as the source for the forward hardware limit. The digital input used for this limit switch input should be set with the destination set to this parameter.

19.41	Rev Hardware Limit Input
Coding	RW, B

This parameter is used as the source for the Reverse hardware limit. The digital input used for this limit switch input should be set with the destination set to this parameter.

19.42	Hardware Limit Polarity
Coding	RW, B

Sets the polarity of the Limit switch inputs.

1 = Normally Closed

0 = Normally Open

For safety reasons a fail-safe normally closed switch is recommended.

19.43	Disable Limit Switches during homing
Coding	RW, B
Default settings:	0

This parameter allows the user to disable the limit switches while the axis is homing, this may be needed because the same switch is used for the limit switch and the home switch, or because the limit switch is located inside the home switch. Care must be taken if this feature is used to ensure that it cannot cause injury to persons or damage to the machine if the home or datum switch fails to operate.

19.44	Change forward direction of slave
Coding	RW, B
Default settings:	0

This parameter may be used to change the forward direction of the axis, however the speed will indicate a negative speed when travelling forward. This is only read on power-up or when the scaling is up-dated.

19.46	Tool Raised Input
Coding	RW, B
Range:	0 – 1

This Parameter should be used to indicate that the tool is raised, and therefore that the flying shear is decelerated. It is anded with the UD70 TTL input, so that either may be used.

19.47	Tool Down Input
Coding	RW, B
Range:	0 – 1

This Parameter should be used to indicate that the tool is fully down and is ready to rise.

19.48	Flying shear running
Coding	RO, B
Default settings:	0

This parameter indicates that the Flying shear is running and the cam is enabled, this parameter should be used a ready interlock, or a start signal to the master / line.

19.49	Tool Enable
Coding	RW, B
Default settings:	0

This parameter is used to enable the tool output to operate, however, it should not be used as a safety feature, and an external fail-safe device that is able to inhibit the tool from operating should be used to protect persons from injury or damage to the machine.

19.50	Gap Enable
Coding	RW, B
Default settings:	0

This parameter is used to enable a trapezoidal profile to be added to the cam profile to produce a gap between flying shear cycles, it can only be used in the parallel shear mode.

Note: Using this mode takes additional processor resources and in some cases especially where fieldbus options are used may cause intermittent nuisance trips.

7.2.3 Menu 20

Parameters 20.01 to 20.19 are reserved for Fieldbus set up parameters. Please refer to the following list of manuals for the parameter allocations and set-up.

Manual Description	CT Part Number
Profibus-DP	0460-0075
Interbus	0460-0076
Modbus-Plus	0400-0035
CTNet	0460-0025
Devicenet	0460-0077
CAN	0460-0063
CANOpen	0460-0061
UD70 RS485 Port (CTANSI, Modbus RTU, custom)	0447-0017

20.21	Minimum Cut Length
Coding	RO, U
Range:	0 – 32000
Units:	Units

This parameter reports the minimum cut length that can be achieved with the current parameter.

20.22	Cam Status
Coding	RO, U
Range:	0 - 5

This parameter returns the status of the flying shear profile calculation.

0 = Cam Calculated OK

Faults

Bit 0 = Insufficient travel available for the flying shear to perform flying shear profile

Bit 1 = Cut length is not achievable with flying shear profile parameter.

Bit 2 = Master is too fast, slave is unable to synchronise

20.23	Flying Shear Profile Control Word
Coding	RW, U
Range:	0 – 2
Default:	0

This parameter is used to specify the operation of the flying shear.

0 = Cyclic cut without registration

1 = Cut on Registration Mark

20.24	Cut Length
Coding	RW, U
Range:	0 - 32000
Units:	Units

This parameter has different functions depending upon parameter 20.23.

If parameter 20.23 is set for cyclic cut, this parameter is used to set the cut length, the flying shear return to the start position at the minimum speed and acceleration rates, but still with sufficient time to make the next cut length.

If parameter 20.23 is set for Registration, then this parameter is used to set the mean distance for windowing.

20.25	**Shear Length / Shear Angle**
Coding	RW, U
Range:	1 – 32000
Units:	Units / 0.01degrees

The function of this parameter depends upon the operating Mode:

Parallel Shear

The shear length is used to ensure that the flying shear profile does not attempt to exceed the available travel. This parameter should be entered as the amount of travel available from the start position of the flying shear to the forward limit switch.

Angled Shear

This parameter defines the angle between the flow of the product and the shear carriage in units of 0.01 degrees

20.26	**Fly Acceleration / Deceleration Rate**
Coding	RW, U
Range:	0 – 32000
Units:	Units / s^2

This parameter defines the acceleration and deceleration rate for the fly part of the profile.

20.27	**Return Acceleration / Deceleration Rate**
Coding	RW, U
Range:	1 – 32000
Units:	Units / s^2

This parameter defines the maximum acceleration and deceleration rate when the axis is returning to the start position, following the fly profile.

20.28	Maximum Master Velocity
Coding	RW, U
Range:	1 – 32000
Units:	Units / s

This parameter defines the maximum velocity that the master is expected to travel, it is used for calculating the profile, the master must not exceed this speed.

20.29	Settling time / Accel Distance
Coding	RW, U
Range:	0 to 32000
Units:	Ms

The function of this parameter depends upon the operating Mode:

Parallel Shear

The synchronised part of the fly profile is broken down into three areas, settling time, tool down time, and tool up time.

The settling time defines the number of ms that are required to recover following error following the acceleration of the flying shear.

Angled Shear

This parameter defines the distance over which the shear can be accelerated to sync speed.

20.30	Tool Down Time / Sync Distance
Coding	RW, U
Range:	0 to 32000
Units:	Ms

The function of this parameter depends upon the operating Mode:

Parallel Shear

The tool down time is used to specify the number of ms that the tool cut output needs to be on to perform the cut.

Angled Shear

This parameter defines the distance over which the shear miust be synchronised with the product.

20.31	Tool Up time / Decel Distance
Coding	RW, U
Range:	0 to 32000
Units:	Ms

The function of this parameter depends upon the operating Mode:

Parallel Shear

The Tool up time is used to specify the number of ms required for the tool up input to be received after the tool cut signal is removed.

At the end of this time the tool up input is interrogated and action is taken according to the setting of parameter 18.33

Angled Shear

This parameter defines the distance over which the shear can be decelerates from sync speed to stop.

20.32	Cut Length Fine Adjustment
Coding	RO, U
Range:	0 to 32000
Units:	Units / 1000

This parameter is used to provide a fine adjustment to the required cut length.

20.33	FE Cut Limit
Coding	RW, U
Range:	0 - 32000
Units:	Encoder Counts

This parameter is used to specify the acceptable following error during the cut part of the profile.

20.34	Fast Decel Rate
Coding	RW, U
Range:	0 - 32000
Units:	Units/s/s

This parameter is used to specify the rate at which the flying shear will decelerate if a software or hardware limit is hit.

20.35	Ramp Mode
Coding	RW, U
Range:	0 - 1

If this parameter is set to 1 then s-ramps will be used for the flying shear profile.

Note: Using this mode takes additional processor resources and in some cases especially where fieldbus options are used may cause intermittent nuisance trips.

20.36	Cam Pointer
Coding	RO, U
Range:	0 – 10

Cam Pointer Position.

20.37	Enable Virtual Master
Coding	RW, B
Default settings:	0

A virtual master may be used for commissioning the application, so that the profiles can be seen without any risk of damage to the machine.

Set to 1 to enable the virtual master.

20.38	Virtual Master Speed
Coding	RW, U
Range:	1 – 32000
Units:	Units / s
Default:	50

Set the speed at which you want the virtual master to run.

Note: The virtual master has no ramps.

20.39	Flying Shear Start Position
Coding	RW, U
Range:	1 – 32000
Units:	Units
Default:	0

20.41	Angled Knife Enable
Coding	RW, B
Range:	0 – 1

The software is able to handle both parallel flying shears and Angled flying shears, where the shear is positioned at an angle to the production flow.

20.42	Registration Fine Offset
Coding	RW, U
Range:	0 – 32000
Units:	Units / 1000
Default:	0

The distance between a Registration sensor and the start position of the knife is set by parameter 20.43, This parameter gives a fine offset to allow higher accuracy.

20.43	Registration offset
Coding	RW, U
Range:	0 – 32000
Units:	Units
Default:	0

Distance between the registration sensor and the flying shear start position.

20.44	Registration Window Enable
Coding	RW, B
Default:	0

Set to 1 to enable registration windowing.

20.45	Registration Window Tolerance
Coding	RW, U
Range:	0 – 32000
Units:	Units
Default:	0

This parameter is used to set the open and close position for the window and any marks detected outside the tolerance will be rejected.

Parameter 20.24 is used to set the distance for the centre position of the window.

20.46	Preset Master Position command
Coding	RW, B
Units:	Units
Default:	0

On the rising edge this parameter is used to preset the position of the master axis to the value in parameter 20.47, so that the windowing function can be used.

20.47	Master Position Preset Value
Coding	RW, U
Range:	0 – 32000
Units:	Units
Default:	0

This value is used to preset the master position on the rising edge of parameter 20.46

20.49	Application Software Version
Coding	RW, U

8 Error Handling / Trouble Shooting

8.1 Application Error Handling

As the system is designed to be as flexible as possible, some trips may or not be required depending upon the individual application, and so we have given the system engineer the flexibility to do a risk analysis and decide how the errors are handled.

Options available:

- No alarm, no trip
- Alarm & no trip
- Alarm & trip Drive Immediately
- Alarm & trip drive if idle or otherwise after current flying shear cycle

These are set using three registers that contain an individual bit for each of the error states:

Bit	Description
0	Tool did not rise at the end of the cycle
1	Following Error Outside Limit
2	Other tool error
3	Start Cut Error, master not stationary
4	Cam calculation parameter fault
5	Master Speed too fast
6	Sequence abort parameter fault
7	Homing Fault
8	Fwd H/W Lim
9	Rev H/W Lim
10	Fwd S/W Lim
11	Rev S/W Lim
12	Remote Fieldbus Trip
13	Watchdog fault error
14	Reserved
15	Reserved

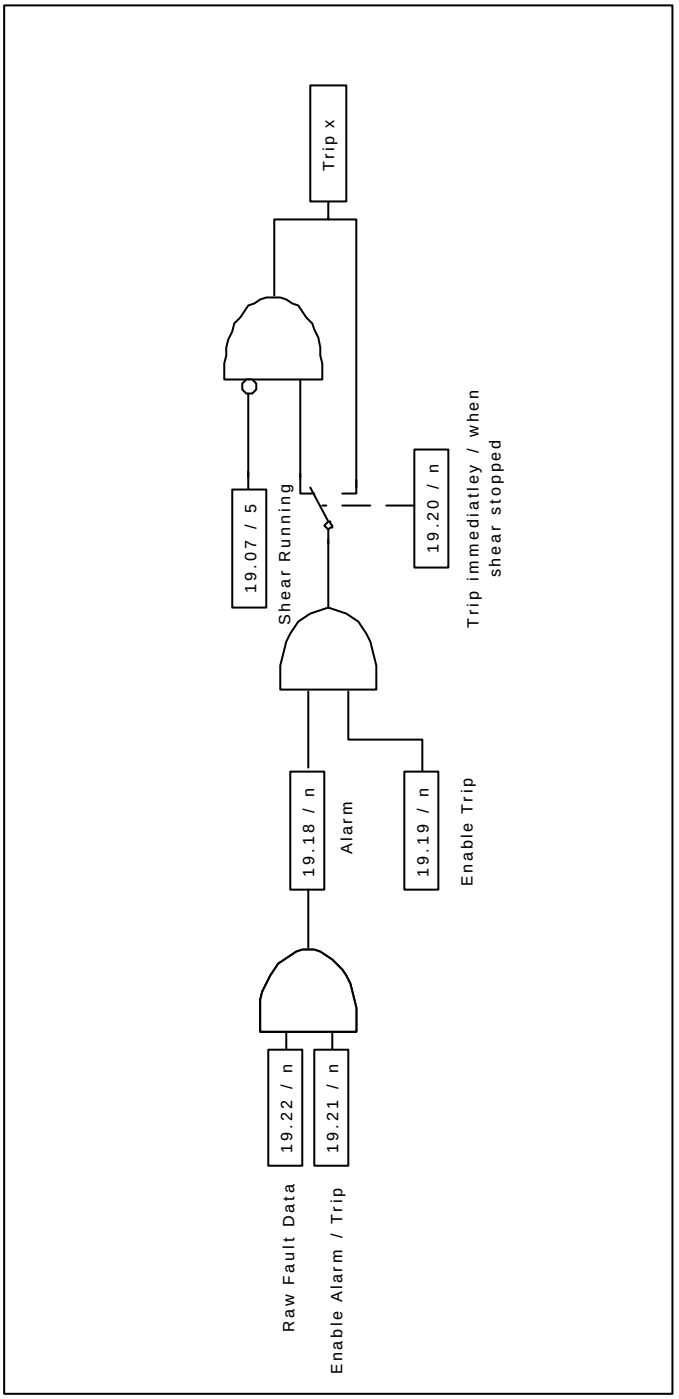
Raw Fault Data
Enable Alarm / Trip
19.22 / n
19.21 / n
19.18 / n
Alarm
19.19 / n
Enable Trip
19.07 / 5
Shear Running
19.20 / n
Trip immediatley / when shear stopped
Trip x

8.1.1 Trip Codes

Trips 40 to 60 - UD70 / Comms option module trips
(Refer to UD70 User Guide)

Trips 80 to 94 – Application specific trips

Trips 95 to 99 – Application standard trips

Trip Number	Description
Tr80	Tool Did not rise at the end of the cycle
Tr81	FE Limit Error
Tr82	Other tool error
Tr83	Start Cut Error, master not stationary
Tr84	Profile Calculated Incorrectly
Tr85	Master Over speed Error
Tr86	Sequence Abort Parameter 19.39
Tr87	Homing Error, Refer to 18.01 for Details
Tr88	Forward Hardware Limit Error
Tr89	Reverse Hardware Limit Error
Tr90	Forward Software Limit Error
Tr91	Reverse Software Limit Error
Tr92	Reserved
Tr93	Reserved
Tr94	Reserved
Tr95	Reserved
Tr96	Reserved
Tr97	Reserved
Tr98	Remote Fieldbus Trip
Tr99	Communications Watchdog Error

Trip 80

This alarm / trip is set when the tool is not up at the end of the flying shear cycle, it is only used only if Tool Sync parameter 18.33 is set to 1, the trip will only occur when the axis is stationary, and so trip immediately is disabled

Trip 81

This trip can be caused by either a general following error trip, which is set when the following error exceeds the value set by parameter 19.11 or when the following error is exceeds parameter 20.33 during a cut cycle, in the later case the following error is only checked before the tool is fired.

Trip 82

This trip can occur for a number of reasons, refer to parameter 19.26 for modes:

Tool not up at the start of the cut cycle

Tool not up at the end of the sync period

The tool down signal is not set at the end of the cut period

The following error is exceeded, and cut is aborted

Trip 83

This trip will occur only if cut on start parameter 19.27 is set, and occurs when the master axis is not stationary to allow the cut to take place.

Trip 84

The flying shear profile cannot be achieved. This should not cause a dangerous condition, as the old profile will continue to be used until a suitable cam is calculated. The cause for the calculation error is given by parameter 20.23

Trip 85

Master speed exceeds the value set by parameter 20.28 by more than 10%.

Trip 86

Sequence abort parameter 19.39 is set to 1

Trip 87

A homing fault has occurred, such as the home sequence has taken to long and has timed out. Refer to parameter 18.01 for more detail.

Trip 88 – 91

Hardware and Software Limits

Trip 98

Set by the remote control word, parameter _S70% bit 7

Trip 99

This trip occurs if the watchdog is enabled, parameter 18.45 is set, and is caused by a communication loss between a remote device and the UD70.

8.1.2 Drive Trip Recovery.

When the drive trips the application programme will be reset when the drive is reset. However, the cause of the trip may still be present, such as a hardware limit may be active, the application software will prevent the drive from tripping again so that the cause of the problem can be fixed, but will prevent the system from restarting until the trip condition is reset. If for example the forward hardware limit is hit and this trips the drive, after a reset, the only operation that the drive will be able to perform will be jog reverse, to move the axis off the limit switch. Following a drive trip a datum sequence must be performed.

9 Advanced Features

9.1 Serial Communications / Fieldbus Control

9.1.1 Control Word *_S70%* (Parameter 73.70)

Introduction

The fieldbus control word is an efficient way of remotely controlling the motion of a Drive. Due to the restriction of most fieldbus word length the control word length will be no more than 16bits, UD70/MD29 PLC register _S70% will be used to ensure full resolution is maintained (e.g. drive parameter limited to 32000 or 1000).

Each bit in the fieldbus control word has a particular function, and provides a method of controlling the output functions of the Drive (RUN, JOG, TRIP, etc.) with a single data word, (16Bits).

To use the fieldbus control word, the ENABLE terminal on the drive must be closed, and the MASK bit must be set to 1. The 0-1 transition of the MASK bit will cause the digital I/O control to be switched from local terminal mode to fieldbus control.

When the MASK bit is reset to 0, the Digital I/O control is switched terminal control mode.

A selector switch can also be used to select between local (terminal) and remote (fieldbus) control of the Drive. If a digital input is configured to directly control mode parameter assigned (MM.PP), the value written by the Main Title interface will be immediately overwritten by the digital input.

Bit	Function	Description
0	ENABLE	Must be set to 1 to put the Commander SE in READY mode. Resetting to 0 will immediately disable the Drive, and the motor will coast to stop.
1	Run	Set to 1 to run the flying shear cycle, when reset to zero the flying shear will stop at the end of the current cycle.
2	Jog FWD	Set to 1 to run the motor in the forward direction. When reset to 0, the motor will stop
3	Jog REV	Set to 1 to run the motor in the Reverse direction. When reset to 0, the motor will stop
4	MASK	A 0-1 transition of this bit will set MM.PP to 1 to enable fieldbus control of the Drive. 19.35 can subsequently be over-written by a digital input if a terminal or fieldbus control selector switch is required. (A 1-0 transition will reset 19.35 to 0.)
5	Reserved	
6	RESET	A 0-1 transition will reset the drive from any trip condition. If the cause of the trip has not been cleared, the Drive will not trip again immediately.
7	TRIP	A 0-1 transition will force a “tr83” trip on the Drive. If the RESET and TRIP bits change from 0 to 1 on the same cycle, the TRIP bit will take priority.
8	Home	A 0-1 transition will initiate a homing sequence
9	Tool Enable	If set to 1 then the cutting tool is enabled
10	Start Pos	A 0-1 transition will command the drive to travel to the start position.
11	Save Pars	Save Parameters
12		
13		
14	WDin	Watchdog In Comms clock from remote device.
15		

The recommended control method for the PLC program is to reset the fieldbus control word to a safe state, e.g. Drive disabled, when a fault is detected in either the Application software, (The Drive control word is reset to 0 automatically when the Drive trips.) When the Serial Communication link is healthy again, the appropriate fieldbus control word can be set, a change of fieldbus control is detected, the Drive control word will be updated and the Drive will restart. Some example fieldbus control word values to control the Drive are given in the table below.

Wdin is the communication watchdog bit transmitted from remote intelligent device, (PLC, keypad or CTIU, etc).

9.1.2 Fault Word _R69% (Parameter 72.69)

The Fault word returns the current fault status of the drive.

Bit	Description
0	Tool Raised Switch Error
1	Following Error Outside Limit
2	Tool did not rise at end of the cut sequence
3	Remote Fieldbus Trip
4	Cam calculation parameter fault
5	Watchdog fault error
6	Sequence abort parameter fault
7	Homing Fault
8	Fwd H/W Lim
9	Rev H/W Lim
10	Fwd S/W Lim
11	Rev S/W Lim
12	Master Speed too fast
13	
14	
15	

9.1.3 Status Words _R70%, _R71%

Status Word 1 *_R70%* (Parameter 72.70)

Bit	Parameter	Description
0	10.01	Drive healthy
1	10.02	Drive running
2	10.03	Zero speed
3	8.07 & 06.15	Drive Enabled (Ready)
4		
5		
6		
7		
8		
9		
10		
11		
12		
13		
14		
15		

Wdout is the communication watchdog bit transmitted from the UD70/MD29 to a remote intelligent device, (keypad or CTIU, etc).

Status Word 2 _R71% (Parameter 72.71)

Bit	Description
0	Jogging
1	Travelling To Start Position
2	At Start Position
3	Homing Sequence Active
4	Homing Done
5	Flying Shear Cycle Running
6	Cyclic Mode Selected
7	Remote Control Active
8	Registration Mode Selected
9	New Cam is being Calculated
10	Cam is Ready
11	On Last Cut In Batch
12	Watchdog Clock Signal Out
13	
14	
15	

Note: The watchdog must be enabled to allow the Local / Remote mode to be set to remote, this is done to prevent the flying shear from running / Jogging and Homing unexpectedly.

CTIU – Operator Panel

The CTIU operator interface enables the user to monitor, set-up and control the flying shear application remotely without the need to use the manual or Unidrive parameter numbers. All parameters are displayed in text rather than using it's Unidrive parameter number. Textual descriptions are also given for trips/alarms, Boolean statuses/settings and selection parameters. On line Help descriptions are available for further information on the configuration parameters.

Front View of CTIU110

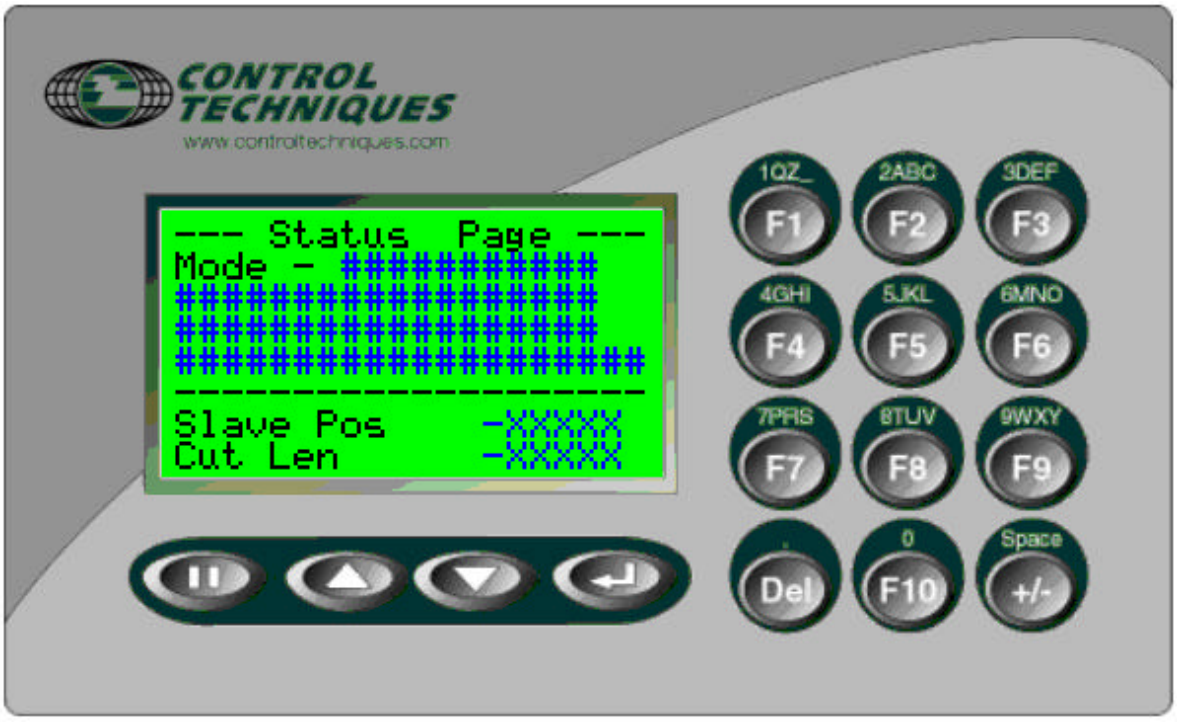

9.2 Software Version

CTIU Software Version – V01.00.00 or greater, this will be displayed on the CTIU second splash screen or can be found under the 'Drive Diagnostics' menu

9.3 Mechanical Installation

9.3.1 Panel Cut-out Detail

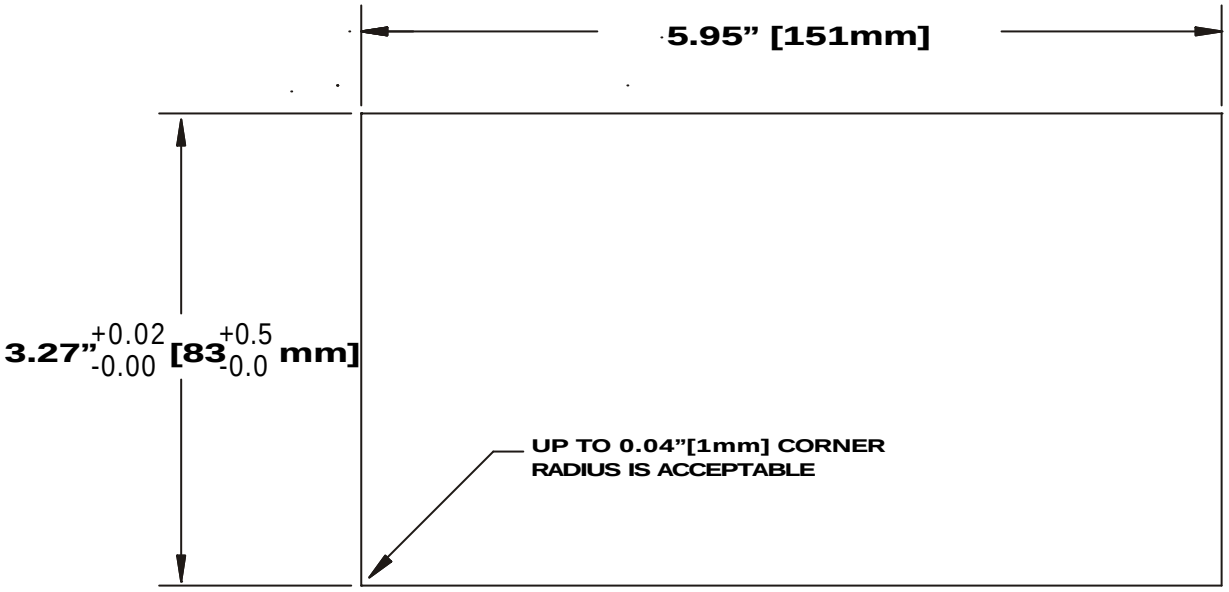

CTIU11X CUTOUT DETAILS

TOLERANCES ARE +/- 0.01” [0.3mm] UNLESS STATED OTHERWISE

9.4 Electrical Installation

9.4.1 CTIU110 Rear View

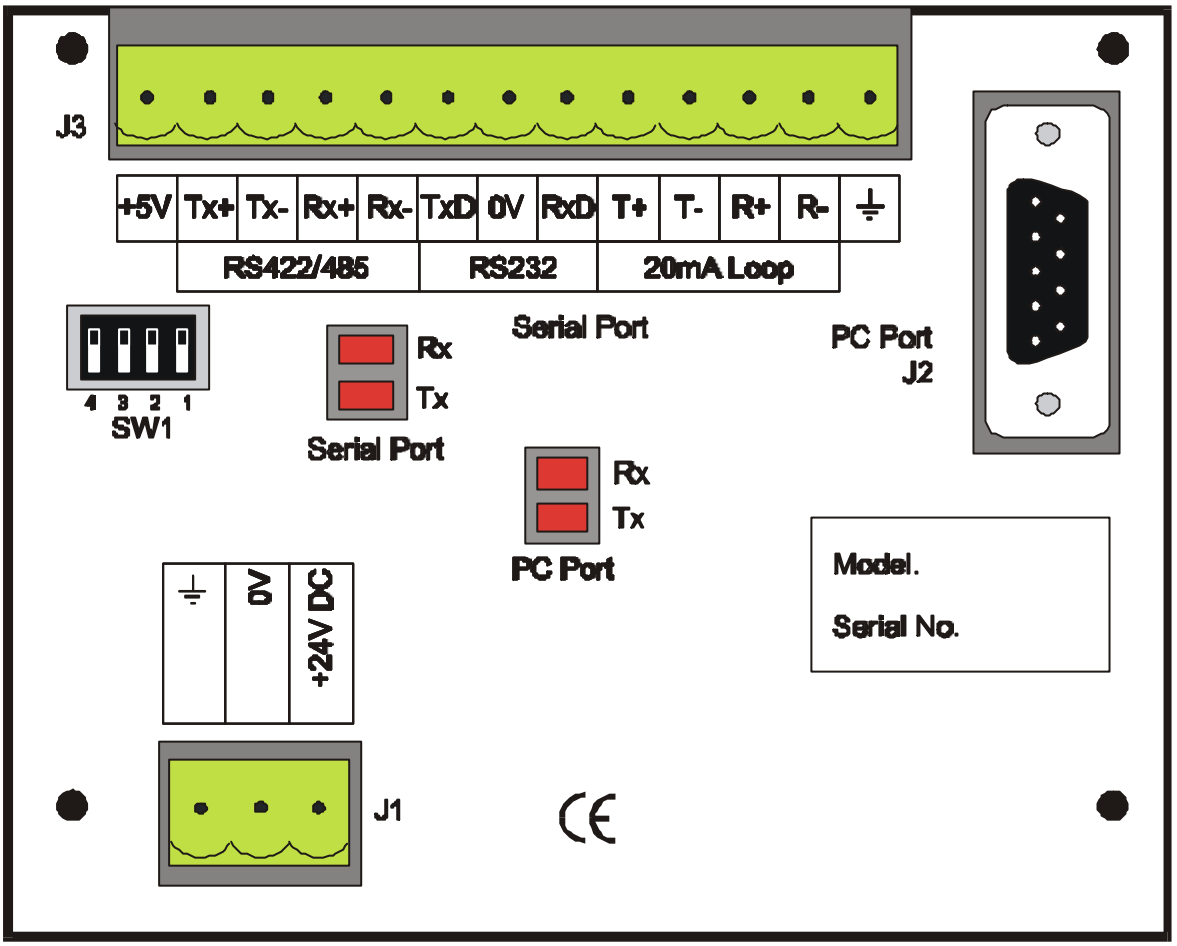

24Vdc Power Supply Requirements (J1)
Peak Inrush – 240mA
Continuous – 100mA

9.4.2 Serial Communications Cable Connections

Unidrive Application Module

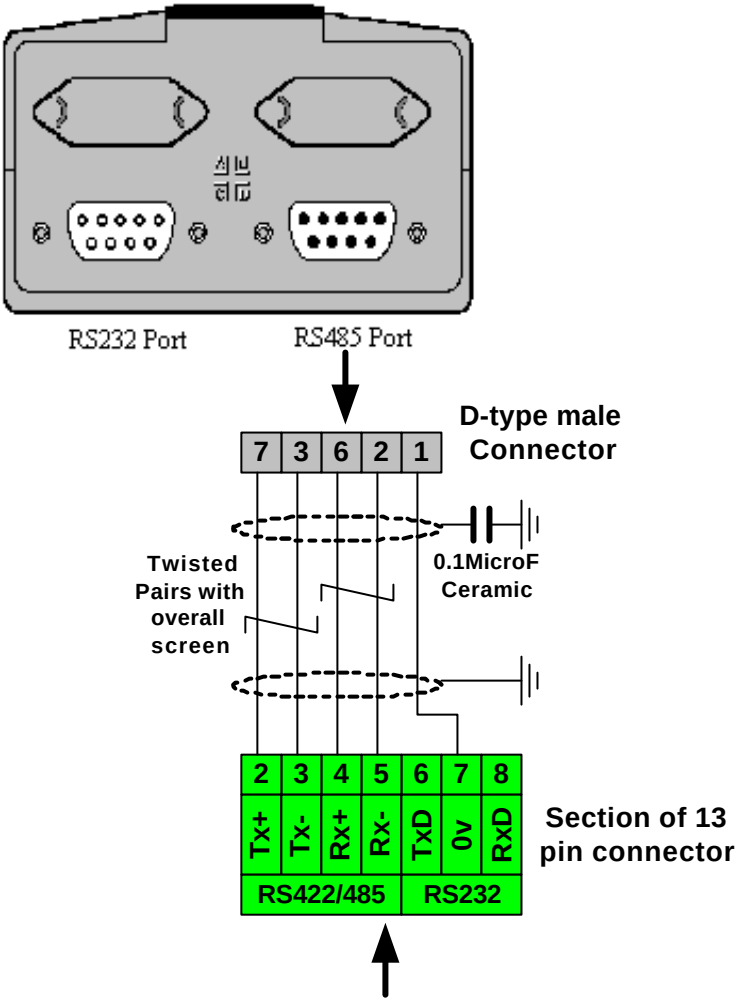

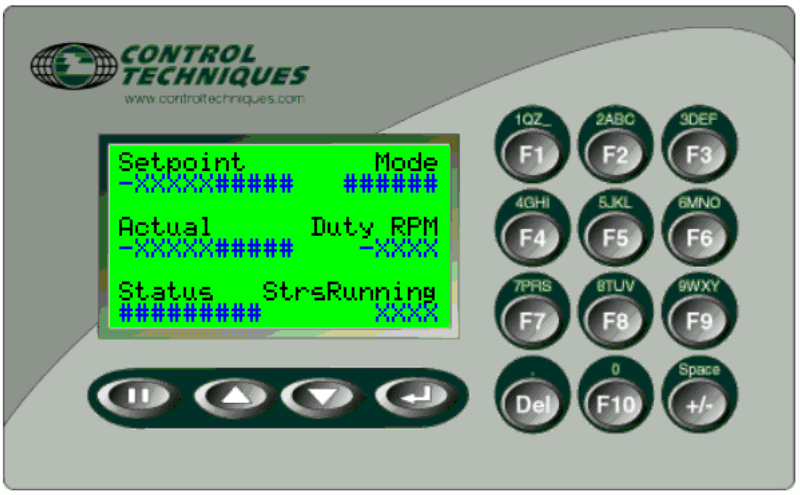

CTIU

Recommended Cables
Belden No. 8105, 9807 or 9832 – General Purpose
Belden No. 8165 – Heavy Noise Environment

9.5 Unidrive set-up

The protocol used between the CTIU110 and the Unidrive applcation module is Modbus RTU. To establish comunications the Unidrive Address, Baud rate and Protocol is required to be set, the following table details the required parameters to be set: -

Parameter	Setting	Description
17.05	11	Drive address
17.06	13	RS458 Modbus-RTU protocol mode
17.07	9600	Baud rate

Perform a Drive save to save these setting during power down.

e.g. XX.00 = 1000 followed by reset.

9.5.1 CTIU110 Configuration of the RS-485 Port

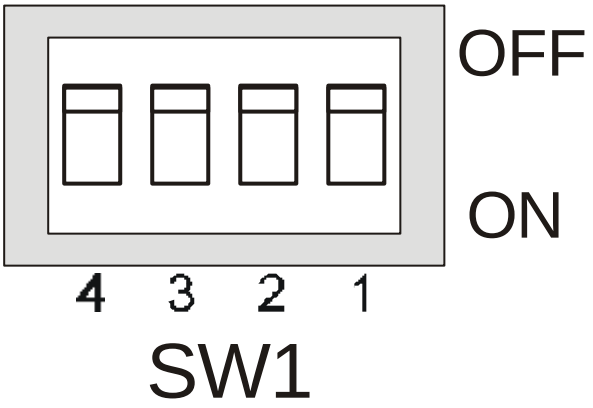

Configuration Bank

The configuration bank sets the parameters of the RS-485 port as described in Table 4.1.

Configuration Bank Description	
Switch 1	ON: Pull-up (must be used together with switch 3) OFF: no Pull-up
Switch 2	ON: 120Ω termination OFF: no termination
Switch 3	ON: Pull-down (must be used together with switch 1) OFF: no Pull-down
Switch 4	Reserved for future use
NOTE: Switch 1 and 3 must be used together. Either both pull-up and pull-down are used or neither is used.	

Pull-up and **Pull-down** switches are used to increase the signal level on the RS-485 bus. This is useful if there is a long bus and a significant amount of attenuation is anticipated.

Termination resistance of 120Ω must be placed across each end of the RS-485 bus. With switch 2 ON, a 120Ω resistance is placed across the bus. This should only be used if the CTIU050/100/110 is the last device at either end of the bus.

9.6 Operation Button Selection Actions

PAUSE key selects data for editing OR exits from data editing.
PAUSE & DOWN keys pressed together, enters sub menu pages.
PAUSE & UP keys pressed together, exits sub menus to the parent menu pages.
UP key selects the previous menu page, sub menu page, alarms, and increments data
DOWN key selects the next menu page, sub menu page, alarms and also decrements data.
ENTER key sends data to the automation equipment, accepts alarms, and displays accepted alarms.
ALPHANUMERIC KEYPAD and **PROGRAMMABLE KEYS** can be used to enter data or can be used to preform some pre-programmed action.

Contrast Adjustment

On menu page 1 (after the start-up screen), hold the ENTER key and press the UP or DOWN key to adjust the contrast. The contrast setting is stored and not lost after removing power.

9.7 Navigation

The flying shear screens are split into 2 sections: -

- Operator section
- Configuration section

The flying shear parameters are grouped into relevant application menus to aid with efficient navigation to each parameter. Each menu has two parts,

A parent menu page, this is the menu header and displays the menu description.

Sub-menu page/s containing all the relevant parameters for the menu.

e.g. Parent Menu Page: I/O Diagnostics

Sub-menu Pages contain relevant parameter for the Parent Menu: -

All status of the Digital Inputs and Outputs Terminals: 1&2 and 24-30.

The current values on all Analogue input terminal: 05-08.

Using on-screen graphical icons the following sections describes how to navigate between Parent and sub-menu screens.

9.7.1 Parent Menu Pages Navigation

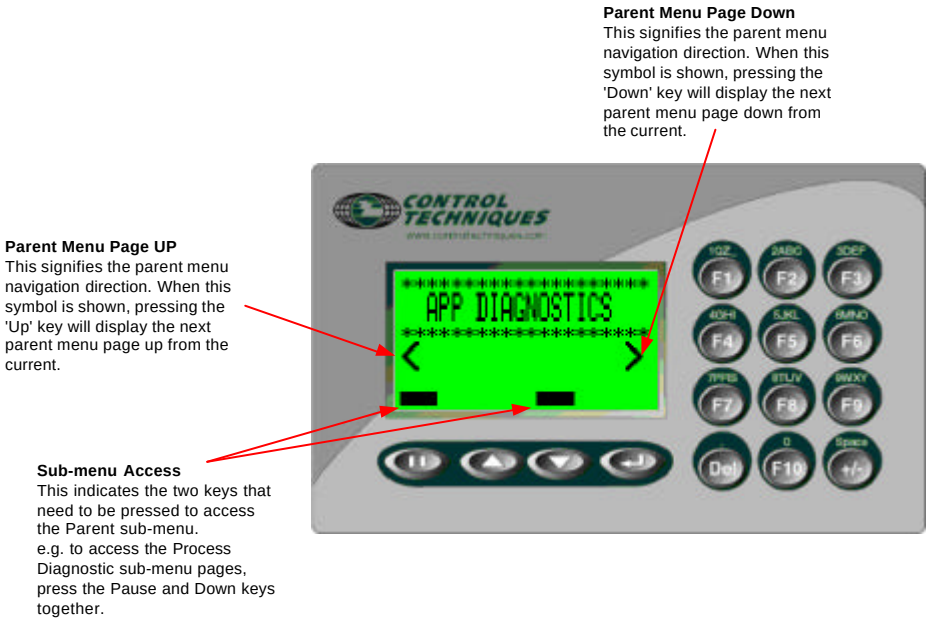

9.7.2 Sub Menu Pages Navigation

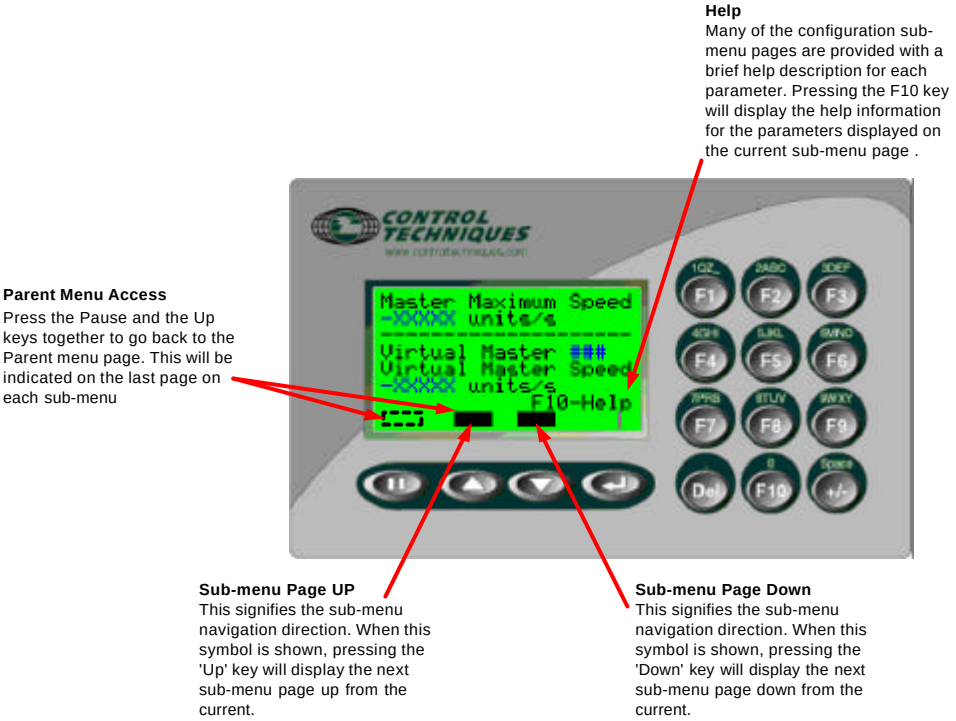

9.8 Operators Screens Description

The operator screens consist of: -

- Top-level main page which provides an overview of all the important parameters of the shear on one screen
- Diagnostic information for drive and the application
- Process set points.

These screens are detailed in the Operators navigation diagram shown below.

9.8.1 Top Level Screen and Functionality

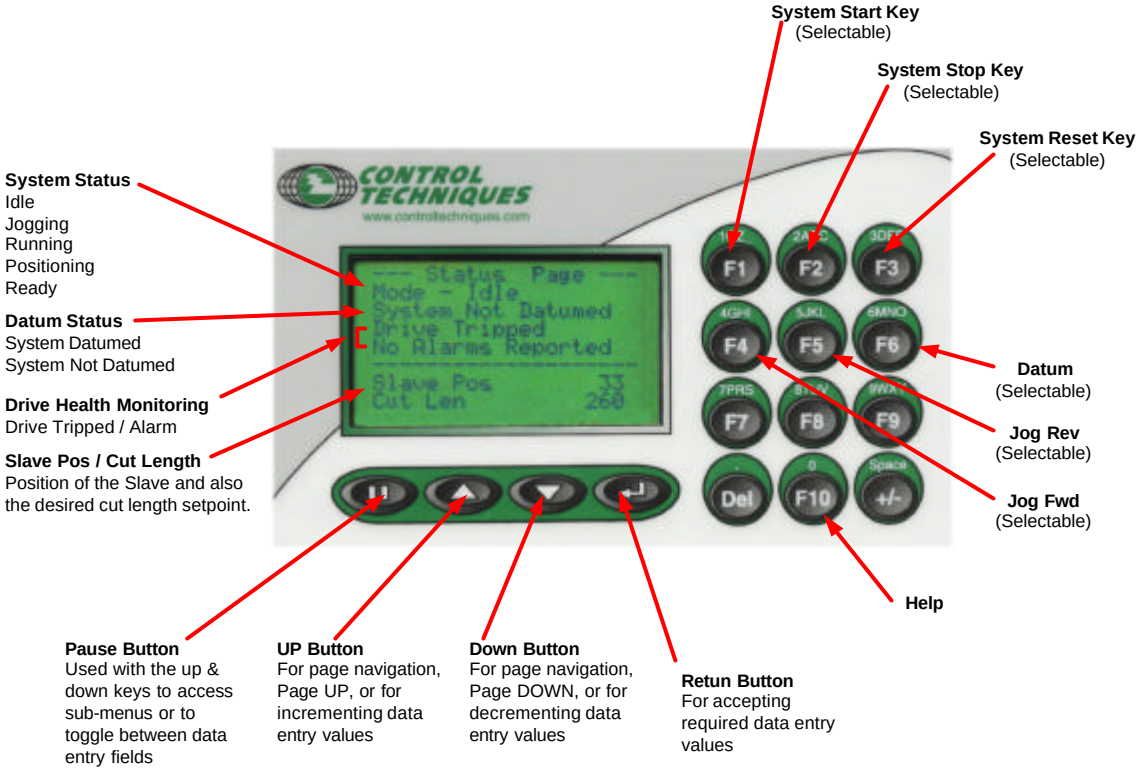

The top-level screen indicates all the common variables for process/application, e.g. set points, feedbacks, status etc. The Top-level screen is always the first menu Page to be displayed. A Menu Timeout, safety feature is used to force the CTIU display focus back to the first (main) menu page after a set time period. The Menu Timeout period is set to 300 seconds (5mins).

9.8.2 Diagnostic Screens

The following diagnostic screens are available: -

Application Diagnostics

Displays parameters directly related to the process control, Feedback alarm thresholds; Feedback; Current alarm status.

Drive Diagnostics

Displays parameters directly related to the drive, Power, Speed, DC Bus Volts, Current, Overload accumulator, etc; Fault log; Software versions.

I/O Diagnostics

Displays parameters directly related to the drive inputs & outputs, Unidrive standard and option digital status's and analogue current values.

Operator Navigation

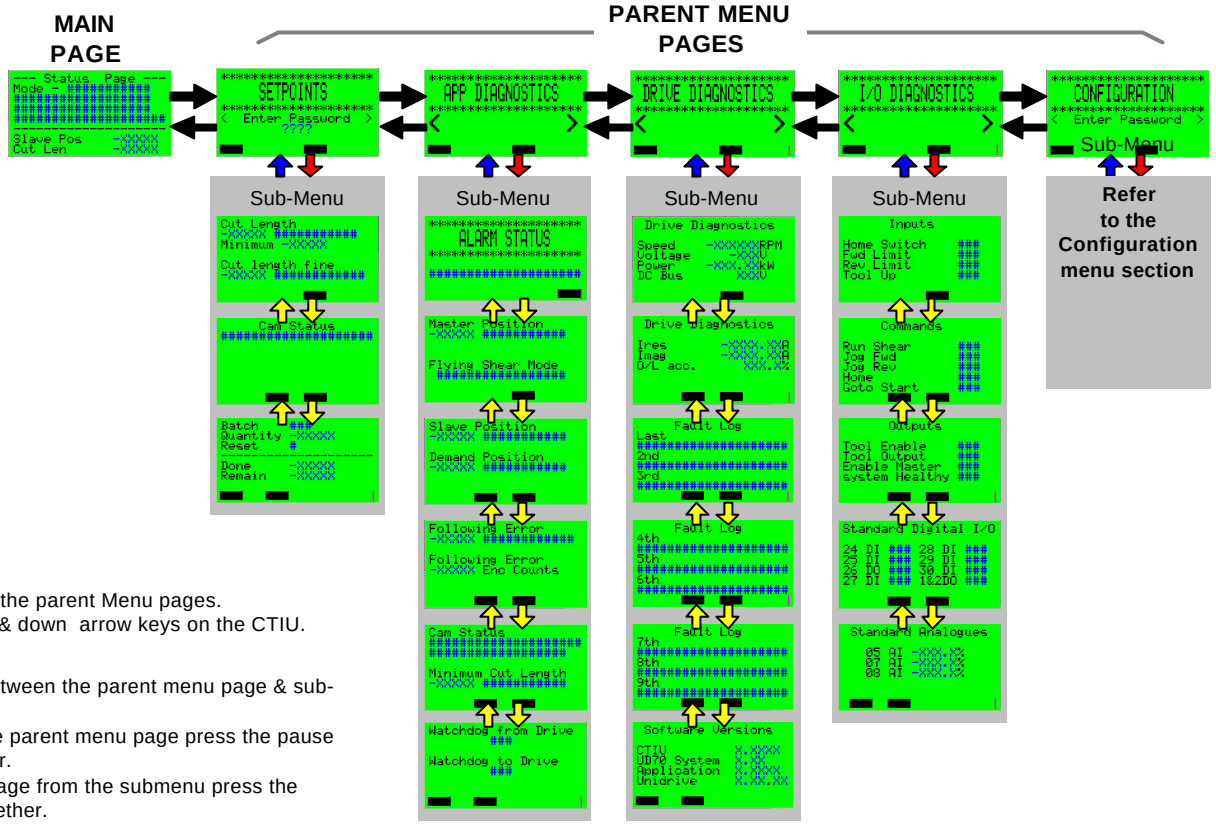

Navigation Arrow Description

- Denotes navigation direction of the parent Menu pages.
  This is achieved by using the up & down arrow keys on the CTIU.

- Denotes navigation direction between the parent menu page & sub-menu pages. (without password).
  To access the sub-menu from the parent menu page press the pause and the down arrow keys together.
  To go back to the parent menu page from the submenu press the pause and the up arrow keys together.

- Denotes navigation direction between the parent menu page & sub-menu pages. (with password).
  This has the same functionality as the Blue arrow but a password is required before access to given to the sub menu.

- Denotes navigation direction of the sub-menu pages.
  This has the same functionality as the Black arrow.

Configuration Navigation

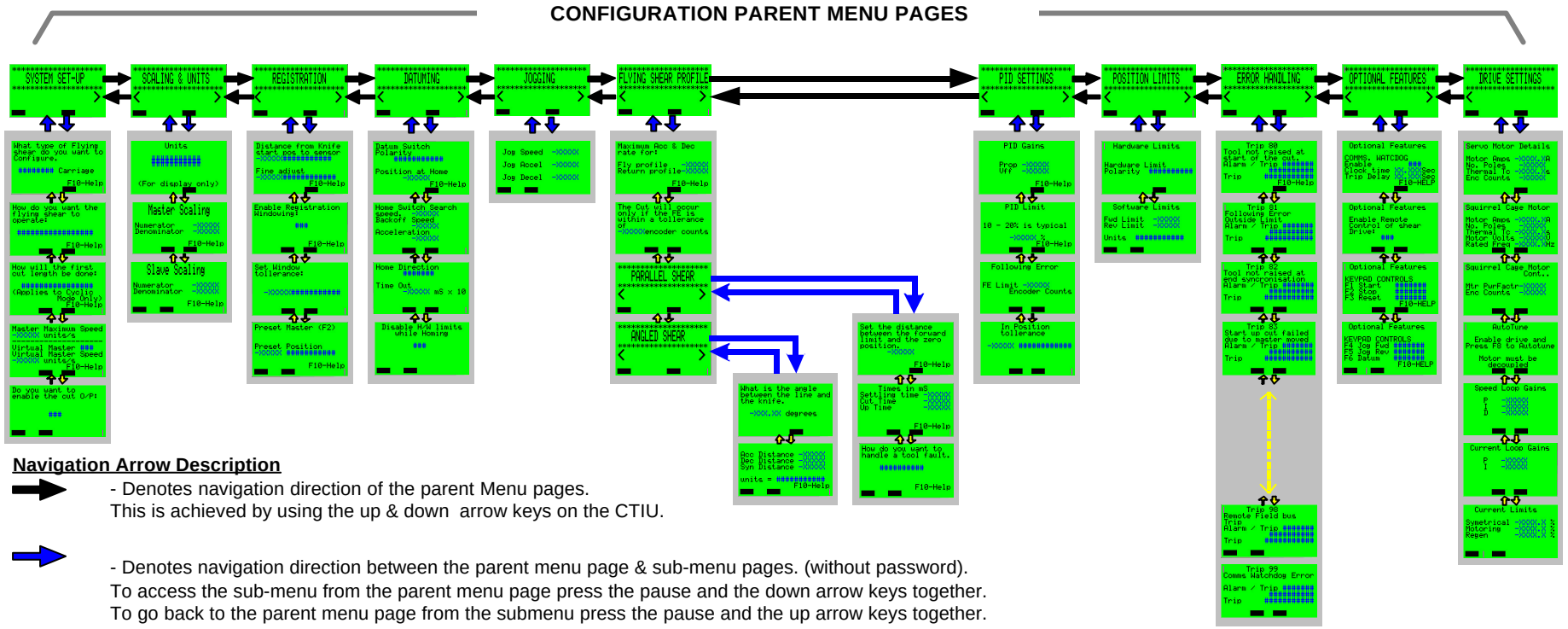

Navigation Arrow Description

- Denotes navigation direction of the parent Menu pages.
This is achieved by using the up & down arrow keys on the CTIU.

- Denotes navigation direction between the parent menu page & sub-menu pages. (without password).
To access the sub-menu from the parent menu page press the pause and the down arrow keys together.
To go back to the parent menu page from the submenu press the pause and the up arrow keys together.

- Denotes navigation direction between the parent menu page & sub-menu pages. (with password).
This has the same functionality as the Blue arrow but a password is required before access to given to the sub menu.

- Denotes navigation direction of the sub-menu pages.
This has the same functionality as the Black arrow.

9.9 Splash Screens

There a two splash screens displayed in sequence during initial power up. These detail the application and software version information.

9.9.1 Application Page (1st Page)

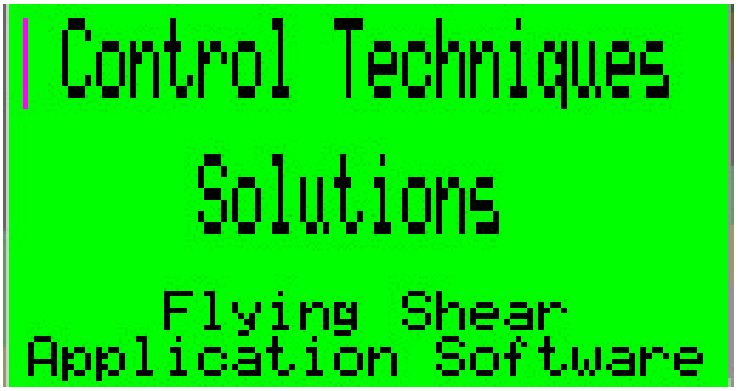

9.9.2 Software Version Page (2nd Page)

9.10 Parameter Save

When any of the editable data fields has been changed within the configuration menus and the Top-level menu page (1) is display (due to timeout, or forced by the user), a parameter save will be prompted to the operator.

9.10.1 Parameter Save Main Screen

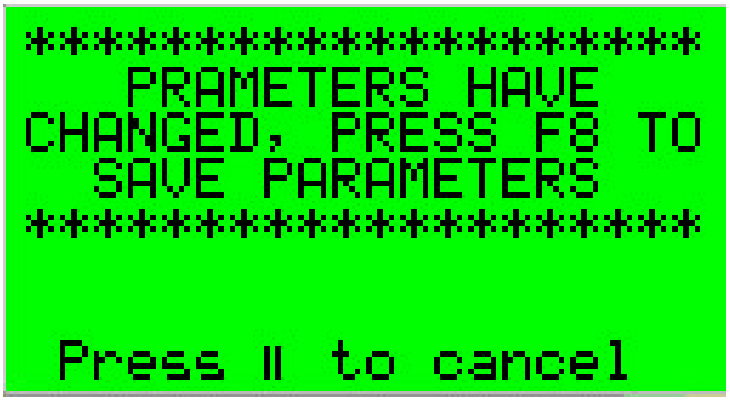

This is the first screen to be displayed, where it indicates to the user to save parameters by pressing Function key F5. To save the parameters the Unidrive must be in stopped state, a flashing message will advise if a save can be performed.

e.g. Flashing Message

Drive Running – Stop Drive to Save

Drive Stopped – OK to Save

If a parameter save is not required the pause (||) key can be press to quit back to the Top-level menu page (1).

9.10.2 Parameter Save Acknowledgement Screen

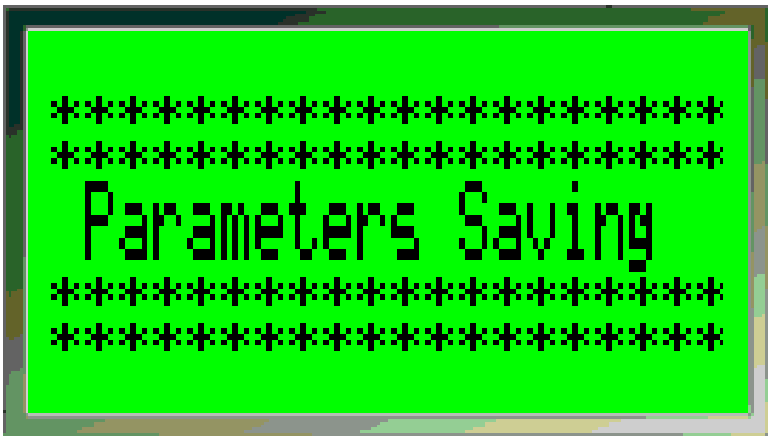

When function key F5 is press with the Drive stopped the above screen will appear acknowledging a parameter save is being performed. After approximately 5 seconds the top level menu page (1) will re-appear, confirming the save has completed.

9.11 Trip & Alarm indication

There are two types Alarm pages: -

- Trip – Indication the system has tripped and needs a reset to resume operation. (Unless the result of the trip has caused permanent damage)
- Alarm – Indication of alarms that will not stop the system but may restrict the operation, or advise the process is close to or on process limits.

Starter alarms will lock out the corresponding starter and make it unavailable for selection, these alarm require a reset to make the starter available again. Indication is given where a reset is required with an alarm.

All pages have to be acknowledged by the pressing of the 'Return' key. This will remove the Alarm page from the display only; this will not reset

any trips or alarms on the drive. A trip or alarm reset is a separate function and can be performed from the CTIU (F3 key when feature is enabled), or from another source (Pushbutton, PLC, etc). When a trip or an alarm is acknowledged but not reset, the Alarm page will be removed from the display of the CTIU. To make the operator aware this is still a trip or an alarm still present, the top level menu page (1), 'Status' data field will indicate that the system has a 'Fault' or an 'Alarm' present. Pressing the 'Return' key while on the top-level menu page (1) will toggle between the Alarm page and the top-level menu page. The alarms and trips can also be review in the following 'Diagnostic Menus':

- Alarms – Process Diagnostics (page 1 of sub menu)
- Trips – Drive Diagnostics (Page 3 Last Fault logged)

9.11.1 TRIP Page (Alarm page 1)

Trip Description
Text table with reference to Unidrive parameter #10.20

Acknowledge
Press Return Key. This will not reset fault.

9.11.2 ALARM PAGE (Alarm page 2)

Alarm Description
Text table with reference to Internal variable %R0035

Acknowledge
Press Return Key. This will not reset alarms where required.

9.12 CTIU Function Keys Allocation

9.12.1 Global Control Function Keys

The following Function keys can be optionally configured from the Configuration 'Optional Features' menu. These functions allow the flying shear application to be fully controlled from the CTIU without the need for addition switchgear (switches, pushbuttons etc). These function keys, when selected, are active on every display focus and will control the application provide the 'Remote select 'parameter is set (18.42 =1): -

F1 – Start, sets bit 1 of the control word when the function key is enabled and pressed.

F2 – Stop, reset bits 1 of the control word when the function key is enabled and pressed.

F3 – Reset, toggles bit 6 of the control word when function key is enabled and pressed and resets to zero when released (pushbutton type).

F4 – Jog Forward, toggles bit 2 of the control word when the function key is enabled and pressed. and resets to zero when released (pushbutton type).

F4 – Jog Reverse, toggles bit 3 of the control word when the function key is enabled and pressed. and resets to zero when released (pushbutton type).

F5 – Datum, toggles bit 8 of the control word when the function key is enabled and pressed. and resets to zero when released (pushbutton type).

NOTE:

When using the start/stop function keys to control the application it is advisable to enable the communications watchdog, so the drive trips 'TR99', when the communication is lost.

9.12.2 Local Function Keys

The following are defined as local function keys as they are only apply to one or range of pages.

- F10 – Call On-line help. This is only available in the configuration pages and provides information for each parameter displayed on the current page.
- F8 – Parameter Save. This is only available when the parameter save status page is displayed. When pressed will save the parameters within the drive and second processor.

10 Quick Reference

10.1 Application Parameters

- Menu 18
- Menu 19
- Menu 20

10.1.1 Menu 18

No.	Description	Typ	Units	Range	Default	Setting
18.01	Home State	RO	List	-3 – +5	-	
18.02	Home Complete Flag	RO	Bit	-	-	
18.03	Background Scan Time	RO	Ms	0 – 32000	-	
18.04	Batch Counter (Count Up)	RO	Qty	0 – 32000	-	
18.05	Batch Counter (Count Down)	RO	Qty	0 – 32000	-	
18.06	Batch Done Flag	RO	Bit	-	-	
18.07	Last Cut Flag	RO	Bit	-	-	
18.08	Not Used	-	-	-	-	
18.09	Not Used	-	-	-	-	
18.10	Not Used	-	-	-	-	
18.11	Units	RW	List	0 – 9	0	
18.12	Master Scaling (Denominator)	RW	Counts	0 – 32000	1	
18.13	Master Scaling (Numerator)	RW	Counts	0 – 32000	16384	
18.14	Slave Scaling (Denominator)	RW	Counts	0 – 32000	1	
18.15	Slave Scaling (Numerator)	RW	Counts	0 – 32000	16384	
18.16	Enable Batch Control	RW	Bit	-	0	
18.17	Batch Quantity	RW	Qty	0 – 32000	10	
18.18	Batch Reset	RW	Bit	-	0	
18.19	Home Speed	RW	Units/s	0 – 32000	5	
18.20	Home Mode	RW	List	-	0	
18.21	Home Back-off Speed	RW	Units/s	0 – 32000	1	
18.22	Home Search Direction	RW	Bit	-	0	
18.23	Home Accel / Decel	RW	Units/s^2	0 – 32000	50	
18.24	Home Time-out	RW	0.01sec	0 – 32000	500	
18.25	Home Offset	RW	Units	0 – 32000	0	
18.26	Watchdog Trip Delay	RW	ms	0 – 32000	2200	
18.27	Watchdog Output Time Period	RW	ms	0 – 32000	700	
18.28	Jog Speed	RW	Units/s	0 – 32000	5	
18.29	Jog Acceleration Rate	RW	Units/s^2	0 – 32000	100	
18.30	Jog Deceleration Rate	RW	Units/s^2	0 – 32000	100	
18.31	Home Switch Polarity	RW	Bit	-	1	
18.32	Home Switch Input	RW	Bit	-	0	
18.33	Tool Sync Enable	RW	Bit	-	0	
18.34	Drive Ready	RO	Bit	-	-	
18.35	Not Used	-	-	-	-	-
18.36	Feedback Source	RW	Bit	-	0	
18.37	Update Scaling	RW	Bit	-	0	
18.38	Not Used	-	-	-	-	-
18.39	Not Used	-	-	-	-	-
18.40	Not Used	-	-	-	-	-
18.41	Not Used	-	-	-	-	-
18.42	Not Used	-	-	-	-	-

18.43	Tool Cut Output	RO	Bit	-	-	
18.44	Default Parameters	RW	Bit	-	0	
18.45	Watchdog Enable	RW	Bit	-	0	
18.46	Watchdog In	RW	Bit	-	0	
18.47	Watchdog Out	RO	Bit	-	-	
18.48	Not Used	-	-	-	-	-
18.49	System Healthy Output	RO	Bit	-	-	
18.50	Not Used	-	-	-	-	-

10.1.2 Menu 19

No.	Description	Typ	Units	Range	Default	Setting
19.01	Position Reference	RO	Units	+/-32000	-	
19.02	Actual Position	RO	Units	+/-32000	-	
19.03	FE Active	RO	Bit	-	-	
19.04	Tool Enable Output	RO	Bit	-	-	
19.05	Following Error (Units)	RO	0.001 Units	+/-32000	-	
19.06	Following Error (Enc Counts)	RO	Counts	+/-32000	-	
19.07	Flying Shear Status Word	RO	-	-	-	
19.08	Not Used	-	-	-	-	
19.09	Not Used	-	-	-	-	
19.10	Master Position	RO	Units	+/-32000	-	
19.11	FE Limit	RW	Counts	0 – 32000	100	
19.12	Position Loop Velocity Feed Forward Gain	RW	-	0 – 32000	1000	
19.13	Position Loop Proportional Gain	RW	-	0 – 32000	16000	
19.14	Forward Software Limit	RW	Units	+/- 32000	0	
19.15	Reverse Software Limit	RW	Units	+/- 32000	0	
19.16	Proportional Gain Output Limit	RW	Percent of max n	0 – 100%	10	
19.17	At Position Tolerance	RW	0.001 Units	0 – 32000	1	
19.18	CTIU Alarm Word	RO	-	-	-	
19.19	Alarm / Trip Select Word	RW	-	0 – 32000	16383	
19.20	Trip Conditional Select Word	RW	-	-	8064	
19.21	Alarm / Trip Enable Word	RW	-	0 – 32000	16383	
19.22	Fault Input Word	RO	-	-	-	
19.23	Gap Length	RW	Units	0 – 32000	0	
19.24	Gap Accel / Decel Rate	RW	Units/s^2	0 – 32000	0	
19.25	Gap Relative Speed	RW	Units/s	0 – 32000	0	
19.26	Cutter IO Mode	RW	Bit	0 – 32000	0	
19.27	Cut before start	RW	Bit	0 – 32000	0	
19.28	Not Used	-	-	-	-	
19.29	Not Used	-	-	-	-	
19.30	First Cut Mode	RW	Bit	0 – 32000	0	
19.31	Manual Cut Command	RW	Bit	-	0	
19.32	Drive / Fault Reset	RW	Bit	-	0	
19.33	Shear Run Command	RW	Bit	-	0	
19.34	Go to Start Position	RW	Bit	-	0	
19.35	Local / Remote Select	RW	Bit	-	0	
19.36	Jog Forward	RW	Bit	-	0	
19.37	Jog Reverse	RW	Bit	-	0	
19.38	Home Command	RW	Bit	-	0	
19.39	Abort Motion Command	RW	Bit	-	0	
19.40	Forward Hardware Limit Input	RW	Bit	-	0	
19.41	Reverse Hardware Limit Input	RW	Bit	-	0	
19.42	Hardware Limit Input Polarity	RW	Bit	-	0	
19.43	Disable Limits During Homing	RW	Bit	-	0	
19.44	Change Forward Direction	RW	Bit	-	0	
19.45	Not Used	-	Bit	-	0	
19.46	Tool Up Input	RW	Bit	-	0	
19.47	Tool Down Input	RO	Bit	-	0	
19.48	Flying Shear Running	RO	Bit	-	0	
19.49	Tool Enable	RO	Bit	-	0	
19.50	Gap Enable	RW	Bit	-	0	

10.1.3 Menu 20

No.	Description	Typ	Units	Range	Default	Setting
20.20	Not Used	-	-	-	-	
20.21	Minimum Cut Length	RO	Units	-	-	
20.22	Cam Calculation Status	RO	-	-	-	
20.23	Flying Shear Profile Mode	RW	Bit	-	-	
20.24	Cut Length	RW	Units	1 – 32000	500	
20.25	Shear Length	RW	Units	1 – 32000	1000	
20.26	Fly Accel / Decel Rate	RW	Units/s^2	1 – 32000	50	
20.27	Return Accel / Decel Rate	RW	Units/s^2	1 – 32000	50	
20.28	Maximum Master Velocity	RW	Units	1 – 32000	100	
20.29	Settling Time	RW	ms	0 – 32000	50	
20.30	Tool Down Time	RW	ms	0 – 32000	50	
20.31	Tool Up Time	RW	ms	0 – 32000	50	
20.32	Cut Length Fine Adjustment	RW	0.001 Units	0 – 32000	0	
20.33	FE Cut Limit	RW	Counts	1 – 32000	500	
20.34	Fast Deceleration Rate	RW	Units/s^2	1 – 32000	0	
20.35	Ramp Mode	RW	Bit	-	0	
20.36	Cam Pointer Position	RO	-	0 – 10	0	
20.37	Enable Virtual Master	RW	Bit	-	0	
20.38	Virtual Master Speed	RW	Units/s	0 – 32000	0	
20.39	Flying Shear Start Position	RW	Units	+/- 32000	0	
20.40	Not Used	-	-	-	-	
20.41	Flying Shear Type Parallel / Angled	RW	Bit	-	0	
20.42	Registration Fine Offset	RW	0.001 Units	0 – 32000	0	
20.43	Registration Sensor Position	RW	Units	0 – 32000	0	
20.44	Registration Window Enable	RW	Bit	0 – 32000	0	
20.45	Registration Window Tolerance	RW	Units	0 – 32000	0	
20.46	Preset Master Position Command	RW	Bit	0 – 32000	0	
20.47	Master Preset Position Value	RW	Units	+/- 32000	-	
20.48	Not Used	-	-	-	-	
20.49	Application Software Version	RW	-	0 – 32000	-	

11 Documentation Reference

Manual Description	CT Part Number
Unidrive VTC User Guide	0461 - 0006
Unidrive User Guide	0460 - 0070
Unidrive Advanced User Guide	0447 - 1001
Profibus-DP Interface	0460 - 0075
Interbus Interface	0460 - 0076
Modbus-Plus Interface	0400 - 0035
CTNet Interface	0460 - 0025
Devicenet Interface	0460 - 0077
CAN Interface	0460 - 0063
CANOpen Interface	0460 - 0061
UD70 RS485 Port (CTANSI, Modbus_RTU, custom)	0447 - 0017

12 Signal Interface Unit

12.1 GENERAL INFORMATION

The U.T.I.M. (Universal Type-Interface Module) is a DIN rail mountable unit. It is designed to help the user by providing conversion between standard signal levels.

It has three channels of conversion - these are;

Channel	Input Signal Type	Output Signal Type
A	+24V (+12 > +25V)	RS-422 and TTL(inv)
B	+24V (+12 > +25V)	RS-422 and TTL(inv)
C 'TTL'	TTL	+24V (equal to supply voltage)
C 'Enable'	+24V	

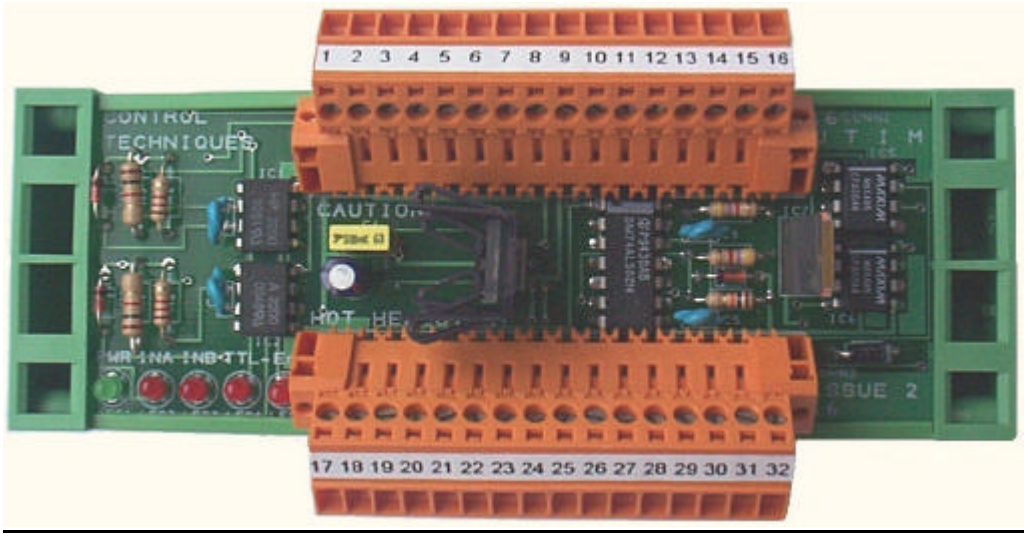

Channels A and B are intended for interfacing a 24volt signal with RS485 / RS422 level inputs or TTL inputs such as those on the UD70. Both inputs are OPTO-isolation from the main circuit for isolation and noise rejection. Channel C is used for converting a TTL level output to a useful 24volt signal that is typically capable of driving sufficient current to operate a solenoid directly or a relay. It is an open-collector type of output and so a load (shunt) resistor will be required if the output is driving a high impedance load. Channel C 'TTL' and 'Enable' inputs do not have OPTO-isolation. The channel C output is inverted with respect to it's (TTL) input and is only enabled when a signal is applied to the 'Enable' input. The 'Enable' input uses positive logic with respect to the channel C output, therefore the 'TTL' input must be LOW and the 'Enable' input must be HIGH in order to derive an output.

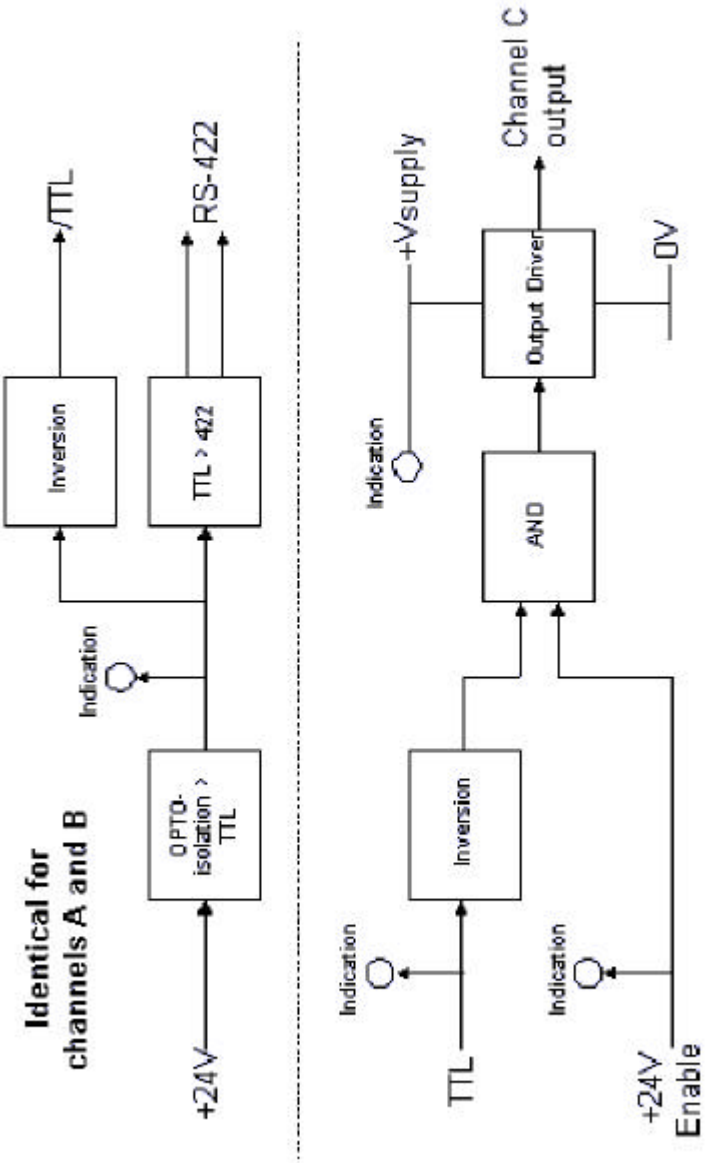
Identical for channels A and B
+24V
OPTO-isolation > TTL
Indication
Inversion
/TTL
TTL > 422
RS-422
Indication
TTL
Inversion
Indication
+24V
Enable
AND
Indication
+Vsupply
Output Driver
0V
Channel C output

	Connector 1		
Terminal	*Usage*	*Polarity*	Notes
1	Power in	0V	common*
2	Power in	+V	common**
3	Input A	0V	isolated
4	Input A	+V	isolated
5	Input B	0V	isolated
6	Input B	+V	isolated
7	Input C TTL	0V	common*
8	Input C TTL	+V	
9	Input C +24V	0V	common*
10	Input C +24V	+V	
11	User Vs out	0V	common*
12	User Vs out	+V	common**
13	User Vs out	0V	common*
14	User Vs out	+V	common**
15	User Vs out	0V	common*
16	User Vs out	+V	common**

	Connector 2		
Terminal	*Usage*	*Polarity*	Notes
17	/TTL out A	0V	common*
18	/TTL out A	+V	
19	/TTL out B	0V	common*
20	/TTL out B	+V	
21	422 out A	-V (inv)	
22	422 out A	+V	
23	422 out B	-V (inv)	
24	422 out B	+V	
25	User Vs out	0V	common*
26	User Vs out	+V	common**
27	User Vs out	0V	common*
28	User Vs out	+V	common**
29	User Vs out	0V	common*
30	User Vs out	+V	common**
31	Ch. C out	0V	common*
32	Ch. C out	+V	common**